SERVICE MANUAL

MODEL "ROYAL 3000-1"

ALL TRANSISTOR TRANSOCEANIC PORTABLE RECEIVER

CHASSIS 12KT40Z8

To the Serviceman

GENERAL

Royal 3000-1 Transistor Portable covers a wide range of frequencies; FM, Longwave, Standard Broadcast, and six shortwave bands. It operates on eight 1½ volt "D" cells which give up to 300 hours of performance under normal operating conditions. A 4" x 6" oval speaker (voice coil impedance 3.2 ohms) is used for excellent reproduction and delivers undistorted power output of 500 milliwatts. This instrument can also be used as an FM-AM tuner in conjunction with high-fidelity audio equipment.

An earphone jack has been provided so that one can use a set of Zenith low impedance headphones, or a Zenith hearing aid type low impedance earphone.

A monopole antenna which is concealed in the handle, is used on both the FM and Shortwave bands. The Standard Broadcast and Longwave band have a built-in Wavemagnet in the top of the cabinet which eliminates the need for an external antenna under average conditions.

FM SECTION

A separate tuner is used on the FM band which consists of a Tuned RF stage, and an autodyne stage (converter – oscillator).

The circuitry for FM operation is as follows:
RF amplifier, autodyne stage, three I.F. stages, Ratio detector, first audio, audio driver, and push-pull class B audio output. The R.F. and autodyne stages operate with common base circuits. The three I.F. stages have common emitter circuits and are neutralized. The I.F. transformers operate at 10.7 megacycles and are slug tuned. To eliminate overloading and resultant distortion in the I.F. pass band and the S curve of the Ratio Detector, AGC is obtained from the collector of the 2nd I.F. thru a 6 mmf. capacitor to diode detector and is fed to the base of the RF transistor. The I.F. signal is reduced to audio with a conventional Ratio Detector incorporating two matched solid state diodes (Part of Ratio Detector Assembly)

As with all high frequency oscillators, stability is important and as a feature, it is desirable to provide automatic frequency control, which is guided by voltages, directly related to oscillator frequency shift. This is accomplished by taking D.C. voltage from the tertiary winding of the Ratio Detector and feeding it back to the X101 diode which is a voltage sensitive variable capacitor. This diode is connected across the oscillator portion of the autodyne circuit and acts as a frequency controlling device. If the oscillator shifts frequency, this causes ratio detector unbalance and a D.C. voltage is fed back to the diode, so its changing capacity will automatically adjust the frequency of the oscillator circuit to compensate for original oscillator shift. In this manner, we have continuous automatic oscillator frequency control.

The lock-in range of the AFC circuit is approximately 700 KC at 100 micro-volts. Should you desire to receive a weak FM station within the AFC pull-in range of a strong FM station, an AFC disabling switch has been provided in the receiver circuitry. The AFC voltage is removed from the oscillator when the AFC switch is in FM position.

To obtain proper AFC action, place AFC switch in FM position and tune to the exact desired station frequency, then put the AFC switch to AFC-FM position..this will insure proper AFC action.

AM SECTION

On AM operation this instrument utilizes a conventional superheterodyne circuit using an individual mixer and oscillator to produce the 455 KC intermediate frequency. The I.F. frequency amplifiers are conventional. It is necessary to use neutralization in the I.F. amplifier stages as in circuits using a triode tube. The diode (part of T11 assembly) is used as a detector and AGC voltage source. This is then followed by a first audio amplifier and a driver stage for the class B push-pull output.

The RF and Oscillator transistors use common base circuitry, while the mixer and the I.F. transistors have common emitter circuitry.

AGC voltage is supplied from the AM diode detector to the base of the RF transistor. The AGC voltage is then taken from the RF emitter and fed to the base of the mixer and first I.F. transistor.

AUDIO SYSTEM

The audio system is common to both FM and AM. The output from either the Ratio Detector or the Am Detector is fed directly to the base of the first audio, and then on through the driver and into the push-pull class "B" output stage.

Provision has been made, for use of this receiver as a tuner in conjunction with high-fidelity equipment through the use of an output jack on the back of the chassis. The volume control on the Royal 3000-1 must be at minimum position to eliminate sound from the receiver's speaker.

OUTPUT TRANSISTORS

MATCHING GROUP
A
B-D
C-E-G
F-H-J
I-K-M
L-N-P
O-Q

The output transistor matching identification will be letters. Transistors in any one chassis must be matched according to group chart.
Letters can be intermixed but must be from the same group.

COMPONENT REPLACEMENT

When soldering components at the base of a transistor socket, it is suggested that the transistor be removed to avoid any possibility of excessive heat transfer through the pin connection to the transistor. When soldering the low voltage electrolytics and germanium diodes, the wire should be held with a pair of long nose pliers. The long nose pliers will act as a heat sink.

SIGNAL TRACING

A technique used in radio repair commonly known as "Screw driver testing" in which the B plus at the plate of the tube or collector of a transistor is shorted to ground to check for "clicks" in the speaker, is definitely not recommended. This practice would be comparable to shorting the collector of a transistor to ground which could damage the transistor. Standard point to point signal checking with the proper RF, IF and audio signals, should only be used.

Wrenches Zenith part number 68-32 and 68-37 may be used for aligning this receiver.

Power Supply.....Eight Zenith Z4NL 1½ volt or standard "D" type flashlight batteries. Approximate battery life 300 hours. One Zenith Z4NL battery is used for the dial lights. Normal no signal current drain is approximately 25 milliamperes.

AC OPERATION

This receiver may be operated from the standard 120 volt alternating current (50/60 cycle) supply. To operate this receiver from an AC outlet Zenith engineers have created a 12 volt DC power supply (part number S-64352 for 120 volts - part number S-65074 for 230/115 volts), which can be obtained through your Zenith dealer.

To connect this unit, insert its output plug into the Jack (J-5) on the side of the receiver cabinet. The battery will be automatically disconnected when the plug is inserted.

IMPORTANT: IF THE RECEIVER IS NOT TO BE OPERATED ON BATTERIES FOR SEVERAL WEEKS, THE BATTERIES SHOULD BE REMOVED.

Tuning Ranges

BAND	METERS (M)	MEGACYCLES (Mc)	KILOCYCLES (Kc)
FM	3.4 to 2.8	88 to 108	88000 to 108000
LW	2000 to 750	.15 to .4	150 to 400
BC	555 to 188	.54 to 1.6	540 to 1600
2-4	150 to 75	2 to 4	2000 to 4000
4-9	75 to 33	4 to 9	4000 to 9000
31	31	9.4 to 10.1	9400 to 10100
25	25	11.4 to 12.3	11400 to 12300
19	19	14.6 to 15.8	14600 to 15800
16	16	17.1 to 18.5	17100 to 18500

Intermediate Frequency.....AM-(455 KC)
FM-(10.7 MC)

MODEL 3000-1

12KT40Z8 CHASSIS PARTS

PART NO.	DESCRIPTION	PRICE
12-3515	Slide Stop Bracket	.03
12-3517	Tuner Slide Bracket	.35
19-322	Coil Mounting Clip (5 req'd.)	.05
19-442	Coil Mounting Clip (18 req'd.)	.05
20-1256	10.7 MC Trap Coil (2 req'd.)	.50
22-1392	25 Pf. Disc Capacitor - 500 V (2 req'd.)	.33
22-1665	5 Pf. Ceramic Capacitor - 500 V	.25
22-1761	50 Pf. Ceramic Capacitor - 500 V (2 req'd.)	.25
22-2381	6 Mmfd. Disc Capacitor - 500 V	.25
22-2549	4 Pf. Disc Capacitor - 500 V	.25
22-2594	17 Pf. Disc Capacitor - 500 V (3 req'd.)	.25
22-2596	2.4 Pf. Gimmick Capacitor - 500 V (2 req'd.)	.25
22-2883	50 Mf. Electrolytic Capacitor - 12 V	1.10
22-2979	60 Pf. Ceramic Capacitor - 500 V	.30
22-2981	2700 Pf. Mica Capacitor - 100 V	1.00
22-2982	4300 Pf. Mica Capacitor - 100 V	1.50
22-2983	Trimmer Capacitor	.35
22-2985	500 Mf. Electrolytic Capacitor - 12 V	2.00
22-2987	.1 Mf. Mylar Capacitor - 50 V	.35
22-3066	10 Pf. Gimmick Capacitor	.20
22-3113	120 Pf. Ceramic Capacitor - 500 V	.50
22-3256	10 Mf. Electrolytic Capacitor - 6 V	1.00
22-3326	2 x .001 Mf. Disc Capacitor - 25 V	.40
22-3538	125 Pf. Mica Capacitor - 100 V	.25
22-3621	22 Pf. Disc Capacitor	.25
22-3743	Three Section Variable Capacitor	5.50
22-3744	Five Section Trimmer Capacitor	3.25
22-3745	Six Section Trimmer Capacitor	4.00
22-3749	1000 Pf. Mica Capacitor - 100 V	.90
22-3752	38 Pf. Disc Capacitor	.25
22-3787	Trimmer Capacitor	.50
22-3791	42 Pf. Disc Capacitor	.25
22-3902	Single Section Trimmer Capacitor	1.00
22-3955	.1 Mfd. Capacitor - 50 V	.30
54-139	3/8-32 x 9/16 Hex Palnut (1 used on ea. 63-5021, 63-5020 & S-69066)	.03
54-227	4-40 x 1/4 x 3/32 Hex Nut (2 used on S-69066)	.03
54-421	Transistor Socket Retaining Nut (10 req'd.)	.03
54-476	1/4-32 x 3/8 Hex Nut - Brass (used on 344-1 or 44-34)	
57-2385	Switch Mounting Plate	.20
58-235	Three Prong Plug	.15
59-330	Dial Pointer	.50
63-1719	27 Ohm Resistor - 1/2 W 10%	.17
63-1740	82 Ohm Resistor - 1/2 W 10% (2 req'd.)	
63-1743	100 Ohm Resistor - 1/2 W 10% (2 req'd.)	.17
63-1761	270 Ohm Resistor - 1/2 W 10%	.17
63-1764	330 Ohm Resistor - 1/2 W 10%	
63-1771	470 Ohm Resistor - 1/2 W 10% (4 req'd.)	.17
63-1772	470 Ohm Resistor - 1/2 W 20%	.17
63-1775	560 Ohm Resistor - 1/2 W 10% (3 req'd.)	.17
63-1778	680 Ohm Resistor - 1/2 W 10%	.17
63-1779	680 Ohm Resistor - 1/2 W 20%	.17
63-1786	1000 Ohm Resistor - 1/2 W 20%	.17
63-1793	1500 Ohm Resistor - 1/2 W 20% (2 req'd.)	.
63-1796	1800 Ohm Resistor - 1/2 W 10% (2 req'd.)	.17
63-1799	2200 Ohm Resistor - 1/2 W 10% (5 req'd.)	.17
63-1806	3300 Ohm Resistor - 1/2 W 10%	.17
63-1817	5600 Ohm Resistor - 1/2 W 10%	
63-1820	6800 Ohm Resistor - 1/2 W 10%	
63-1827	10K Ohm Resistor - 1/2 W 10% (2 req'd)	
63-1834	15K Ohm Resistor - 1/2 W 10%	.17
63-1879	180K Ohm Resistor - 1/2 W 5%	.34
63-1897	470K Ohm Resistor - 1/2 W 10%	.17
63-3392	1500 Ohm Resistor - 1/10 W 10%	.17
63-4157	220 Ohm Resistor - 1/4 W 10% (2 req'd.)	.17
63-4161	270 Ohm Resistor - 1/4 W 10%	.17
63-4171	470 Ohm Resistor - 1/4 W 10% (3 req'd.)	.17
63-4178	680 Ohm Resistor - 1/4 W 10% (2 req'd.)	.17
63-4182	820 Ohm Resistor - 1/4 W 10%	.17
63-4185	1000 Ohm Resistor - 1/4 W 10%	.17
63-4186	1000 Ohm Resistor - 1/4 W 20%	
63-4189	1200 Ohm Resistor - 1/4 W 10%	.17
63-4196	1800 Ohm Resistor - 1/4 W 10%	.17
63-4217	5600 Ohm Resistor - 1/4 W 10% (2 req'd.)	.17
63-4224	8200 Ohm Resistor - 1/4 W 10%	.17
63-4234	15K Ohm Resistor - 1/4 W 10%	
63-4238	18K Ohm Resistor - 1/4 W 10% (2 req'd.)	.17
63-4241	22K Ohm Resistor - 1/4 W 10% (part of S-69066)	.17
63-4259	56K Ohm Resistor - 1/4 W 10%	.17
63-4262	68K Ohm Resistor - 1/4 W 10%	.17
63-4273	120K Ohm Resistor - 1/4 W 10%	
63-4537	6.8 Ohm Resistor - 1/2 W 20%	
63-5020	Volume Control & Switch	2.05
63-5021	Tone Control	1.40
68-32	Adjusting Wrench	.60
73-24	8-32 x 1/4 Slotted Hex Hd. Set Screw - Cuppoint (2 part of S-58124)	
78-644	Connector Socket	.15
78-1063	Transistor Socket - 3 Contact (4 req'd.)	.35
78-1096	Transistor Socket - 4 Contact (6 req'd.)	.35
78-1346	Transistor Socket - 4 Contact (2 req'd.)	.30
78-1528	Wavemagnet Socket (part of S-58151)	.20
80-209	Drive Cord Tension Spring	.10
80-1189	Drive Cord Tension Spring (Pointer)	.15
80-1772	Drive Cord Tension Spring (Pointer)	.05
83-2770	Seven Lug Terminal Strip (part of S-58087)	.20
83-2822	Antenna Terminal Strip (part of S-58087)	.50
83-2918	Four Lug Terminal Strip	.15
83-2975	Three Lug Terminal Strip (2 req'd.)	.10
83-3024	Rubber Strip	.03
83-3586	Twelve Lug Terminal Strip	.20
83-3641	Five Lug Terminal Strip	.10
83-4604	Blanking Strip	.10
85-756	Slide Switch - Momentary Contact (part of S-58147)	.50
85-747	Slide Switch - AFC (part of S-58147)	.50
85-758	Bandswitch	11.00
86-306	Terminal (3 req'd.)	.03
86-329	Connector Terminal (1 used on ea. yellow and black wires)	.03
93-966	Lockwasher (3 used on S-69066)	.03
93-1043	Spring Washer (used on S-58152)	.10
94-334	Capacitor Mounting Bushing (3 req'd.)	.03
94-613	Iron Core Bushing (3 req'd.)	.10
95-2002	1st I.F. Transformer (Primary)	2.50
95-2003	1st I.F. Transformer (Secondary)	2.50
95-2004	2nd I.F. & 3rd I.F. Transformer - AM - Primary (2 req'd.)	3.50
95-2005	2nd I.F. & 3rd I.F. Transformer - AM - Secondary (2 req'd.)	3.50
95-2006	4th I.F. Transformer (Primary)	3.50
95-2010	Ratio Detector Transformer (FM)	5.35
95-2028	Output Transformer	
95-2029	Driver Transformer	
95-2247	2nd & 3rd I.F. Transformer - FM (2 req'd.)	
100-218	Dial Light Lamp - GE No. 123 (2 req'd.)	.17
103-31	Crystal Diode (part of S-52650)	.75
105-96	Integnet	
113-8	6-32 x 1/4 x 1/4 Hex Hd. Mach. Screw - Internal Shakeproof Lockwasher (1 used on 22-3744 & 2 used on 22-3745)	.03
113-9	8-32 x 1/4 x 1/4 Hex Hd. Mach Screw - Internal Shakeproof Lockwasher (3 used on S-58147)	.03
113-10	6-32 x 3/16 x 1/4 Hex Hd. Mach Screw - Internal Shakeproof Lockwasher (2 used on S-58151)	.03
113-13	6-32 x 7/16 x 1/4 Hex Hd. Mach. Screw - External Shakeproof Lockwasher (3 used on 22-3743)	.03
113-121	6-32 x 7/32 Phillips Rd. Hd. Mach. Screw - Internal Lockwasher Attached (used on 22-3902)	.03
113-123	4-40 x 3/16 Phillips Rd. Hd. Mach. Screw - Cadmium - Internal Shakeproof Lockwasher (joins 12-3515 & 12-3517)	.03
114-39	8-32 x 1/4 x 1/4 Hex Hd. Self-tap. Screw - Cadmium (16 req'd.)	.03
114-193	8-32 x 3/16 x 1/4 Hex Hd. Self-tap. Screw - Cadmium	.03
114-456	8-32 x 1/4 Hex Hd. Mach. Screw - Cadmium Flat Washer Attached (2 used on S-58155)	.03
114-571	4-24 x 3/16 x 3/16 Hex Slotted Hd. Self-tap. Screw - Stat. Bronze (2 used on S-58152)	.03
121-349	Transistor - R.F. (AML)	
121-350	Transistor - Oscillator (AM)	
121-351	Transistor - Mixer (AM)	
121-352	Transistor - 1st - 2nd - 3rd I.F.	
121-373	Transistor - Output - Matched (2 req'd.)	
121-374	Transistor - Audio	
121-375	Transistor - Driver	
125-94	Rubber Grommet (3 used on 22-3743)	.03
126-857	Coil Shield (part of S-69066)	.05
126-983	Coil Shield (part of S-52650)	.15

ROYAL 3000-1 CHASSIS 12KT40Z8 PARTS LIST

PART NO.	DESCRIPTION	PRICE
126-1027	Interstage Shield (2 req'd.)	.15
126-1028	Coil Shield (part of S-69066)	.10
149-74	Iron Core (1 part of ea. S-45000)	
149-86	Iron Core (part of S-42080)	.10
149-211	Iron Core (part of ea. S-42084, S-42085, S-42086, S-42087, S-42089, S-42090, S-42091, S-42092, S-42093, S-42094, S-42097, S-42098, S-42099, S-42100, S-42101, S-42102. S-68075, & S-68076 and 2 part of ea. S-43363 & S-43364)	.10
149-316	Iron Core & Spring (3 req'd.)	.25
184-26	Wooden Bead (2 req'd.)	.05
188-232	Clamping Ring (3 req'd.)	.03
199-330	Paper Sleeve (part of S-52650)	.03
322-3	.01 Mf. Disc Capacitor - 25 V (2 req'd.)	.15
or		
22-3393	.01 Mf. Disc Capacitor - 25 V (2 req'd.)	.25
322-9	.001 Mf. Disc Capacitor - 25 V (2 req'd.)	
or		
22-2729	.001 Mf. Disc Capacitor - 25 V (2 req'd.)	.25
322-19	.02 Mf. Disc Capacitor - 25 V	
or		
22-3394	.02 Mf. Disc Capacitor - 25 V	.40
322-20	.05 Mf. Disc Capacitor - 25V (17 req'd.)	
or		
22-3689	.05 Mf. Disc Capacitor - 25 V (17 req'd.)	.30
322-22	5 Mf. Electrolytic Capacitor - 12 V (4 req'd.)	.35
or		
22-2884	5 Mf. Electrolytic Capacitor - 12 V (4 req'd.)	1.50
322-27	.0033 Mf. Disc Capacitor - 500 V (2 req'd.)	
or		
22-13	.0033 Mf. Disc Capacitor (2 req'd.)	.25
322-37	20 Mf. Electrolytic Capacitor - 3 V	
22-3753	20 Mf. Electrolytic Capacitor	.75
322-40	.001 Mf. Disc Capacitor - 1000 V	
or		
22-17	.001 Mf. Disc Capacitor - 1000 V	.25
322-75	.33 Mfd. Mylar Capacitor - 50M	
or		
22-3897	.33 Mfd. Mylar Capacitor	.50
322-76	.22 Mfd. Mylar Capacitor - 50 V	
or		
22-3267	.22 Mfd. Mylar Capacitor	.60
322-82	.0022 Mfd. Disc Capacitor	
or		
22-18	.0022 Mfd. Disc Capacitor - 500 V	.25
344-1	Miniature Jack	.35
or		
44-34	Miniature Jack	.90
403-1	Diode	.35
or		
103-44	Diode	.50
S-42080	Antenna Loading Coil Assembly	.60
S-42084	Oscillator Coil Assembly (31M)	1.25
S-42085	Oscillator Coil Assembly (25M)	1.25
S-42086	Oscillator Coil Assembly (19M)	1.25
S-42087	Oscillator Coil Assembly (16M)	1.25
S-42089	Antenna Coil Assembly (2-4 M.C.)	1.00
S-42090	Antenna Coil Assembly (4-9 M.C.)	1.00
S-42091	Antenna Coil Assembly (31M)	1.00
S-42092	Antenna Coil Assembly (25M)	1.00
S-42093	Antenna Coil Assembly – 18M (part of S-69066)	1.00
S-42094	Antenna Coil Assembly - 16M (part of S-69066)	1.00
S-42097	Mixer Coil Assembly (2-4 M.C.)	1.25
S-42098	Mixer Coil Assembly (4-9 M.C.)	1.25
S-42099	Mixer Coil Assembly (31M)	1.25
S-42100	Mixer Coil Assembly (25M)	1.00
S-42101	Mixer Coil Assembly - 19 M (part of S-69066)	1.25
S-42102	Mixer Coil Assembly - 16M (part of S-69066)	1.25
S-42148	Dial Light Socket & Wire Assembly	1.25
S-42653	Drive Cord, Eyelet & Spring Assembly Pointer - Approx. 20 1/2"	.35
S-43363	Oscillator Coil Assembly (B.C. & L.W.)	2.75
S-43364	Mixer Coil Assembly (B.C. & L.W.)	2.00
S-45000	Series Antenna Coupling Coil Assembly (2 req'd.)	.75
S-49339	Antenna Coil Assembly	
S-50171	Base & Terminal Assembly	.35
S-52650	Diode & Filter Assembly	2.50
S-58087	R.F. Shelf Bracket & Terminal	1.25
S-58095	FM Tuning Coil Assembly (3 req'd.)	.60
S-58151	Wave Magnet Socket & Bracket Assembly	.50
S-68075	Oscillator Coil Assembly (2-4 M.C.)	
S-68076	Oscillator Coil Assembly (4-9 M.C.)	
S-69067	FM Tuner	
	22-2731 10 Pf. Disc Capacitor (2 req'd.)	.25
	22-2732 1000 Pf. Feed-Thru Capacitor (4 req'd.)	.30
	24-1170 FM Tuner Cover	.25
	63-4157 220 Ohm Resistor 1/4 W 10%	.17
	63-4168 390 Ohm Resistor 1/4 W 10%	.17
	63-4175 560 Ohm Resistor 1/4 W 10%	.17
	63-4192 1500 Ohm Resistor 1/4 W 10%	.17
	63-4224 8200 Ohm Resistor 1/4 W 10% (2 req'd.)	.17
	80-1467 Retaining Spring	.05
	80-1672 Spring	.20
	86-331 Insulated Feed-Thru (3 req'd.)	.05
	95-2246 1st I.F. Transformer (FM)	
	103-39 Silicon Diode	3.00
	112-1467 2-56 x 5/16 Phillips Pan Hd. Mach Screw (used on S-64842)	.03
	113-10 6-32 x 3/16 x 1/4 Hex Hd. Mach Screw - Internal Shakeproof Lockwasher	.03
	113-33 4-40 x 1/4 x 7/32 Hex Hd. Mach. Screw - Internal Shakeproof Lockwasher	.03
	121-294 Transistor - R.F. (FM)	
	121-295 Transistor - Oscillator-Mixer (FM)	
	322-3 .01 Mf. Disc Capacitor - 25 V. (3 req'd.)	.15
	or	
	22-3393 .01 Mf. Disc Capacitor - 25 V (2 req'd.)	.25
	322-45 2.2 Pf. Gimmick Capacitor	
	or	
	22-2468 2.2 Pf. Gimmick Capacitor	.25
S-58142	Pulley & Bushing Assembly	.80
S-58147	Control Mounting Bracket Assembly	1.50
S-58152	Dial Drum Assembly	5.00
S-58155	Pulley & Bracket Assembly	.75
S-58159	Drive Cord & Eyelet Assembly - Pointer 11 3/4"	.15
S-58160	Drive Cord & Eyelet Assembly - Pointer 20"	.15
S-58179	Drive Cord & Eyelet Assembly - 14 1/4" (2 req'd.)	.15
S-64842	FM Tuner Drive Shaft Assembly	2.00
S-69066	Bandswitch & Coil Assembly	

CABINET PARTS

Z4NL	1 1/2 V Battery (9 req'd.)	
12-2604	Support Bracket	.95
12-3233	Battery Stop Bracket	.05
12-3656	Chassis Support Bracket	.05
12-3697	Rear Door Locking Bracket	.15
12-4281	Dial Scale Backing Bracket	
15-108	Socket Cap (part of S-48171)	
15-191	Plug Cap	
16-2824	Carton Filler	
16-2908	Packing Carton	
19-373	Cable Clamp (part of S-48171)	
24-1001	Battery Case Cover (part of S-48171)	1.00
36-205	Handle – Bottom Section	1.25
43-311	Wavemagnet Housing (Fixed)	.75
44-54	Sub-Miniature Jack	.75
46-1810	Release Knob	1.25
46-1812	Antenna Knob (part of S-42207)	.25
46-1825	Selector Knob (part of S-58033)	1.25
49-988	4" x 6" PM Speaker	8.00
54-12	6-32 x 1/4 Hex Nut (3 used on ea. S-41853 & S-64592)	.03
54-445	Tinnerman Speed Nut (2 used on S-58115)	.05
54-455	Tinnerman Speed Nut (5 used on ea. 57-4023 & 83-4355)	.03
54-467	Tinnerman Speed Nut (4 used on 49-988 & 8 used on S-58117)	.03
54-578	Fastener (part of S-69029)	.35
54-586	10-48 Hex Nut (used on 44-54)	.03
54-605	Tinnerman Speed Nut (5 used on 192-236)	.03
57-2371	Cabinet Top Plate	5.25
57-2379	Trim Plate - Band Selector (part of S-41853)	1.25
57-2380	Trir	
57-2386	Hin	
	S-	
57-2416	Trir	
57-4019	Nan	
57-4022	Nan	
57-4023	Esc	
57-4024	Esc	
57-4461	Emb	
58-233	Sev	
	S-	
69-312	6-32	
	(1	
69-348	6-32	
	Br	
76-954	Rel	
	Sh	
78-1101	Thr	
80-1094	Con	
80-1176	Sele	
80-1181	Ten	
80-1228	Spri	
83-2741	Trin	
83-2742	Sup	
	S-	
83-2780	Doo	
83-2781	Doo	
83-2785	Rub	
83-2865	Spa	
83-2903	Prot	
83-3234	Pap	
	S-	
83-3235	Pap	
83-3289	Felt	
83-4328	Ret	
83-4354	Trin	
	S-	
83-4355	Trin	
83-4819	Pap	
86-149	Ter	
86-221	Shal	
86-306	Wire	
86-310	Ter	
86-323	Spa	
93-166	Loc	
93-565	.290	
	(1	
93-1289	Fib	
93-1572	Spa	
93-1606	Stee	
94-985	Spa	
101-158	Tra	
110-348	Vin	
	S-	
110-352	Vin	
	(pa	
110-451	Vin	
	(pa	
110-452	Vin	
110-528	Vin	
	S-	
112-1113	4-40	
	Sc	
	12	
112-1123	2-32	
	(5	
112-1124	4-24	
	tap	
112-1150	4-40	
	Sc	
	S-	
112-1156	4-24	
	tap	
112-1190	5-20	
	Sc	
112-1205	2-56	
	Sc	
112-1215	4-24	
	tap	
112-1225	4-40	
	Sc	
112-1332	8-18	
	Sc	
112-1451	6-20	
	Sc	
	43	

GGESTED U.S. RETAIL WHICH INCLUDE U.S. MANUFACTURERS' EXCISE TAX, WHERE APPLICABLE, AND ARE SUBJECT TO CHANGE WIT

DESCRIPTION	PRICE
Trim Plate (part of S-64592)	1.50
Hinge Plate (1 part of ea. S-41853 & S-64592)	.25
Trim Plate - Tuning (part of S-56299)	.80
Nameplate Overlay (part of S-58122)	.50
Nameplate - Escutcheon (part of S-58122)	1.25
Escutcheon Plate	1.50
Escutcheon Plate Overlay	.85
Emblem Plate (part of S-58124)	.50
Seven Prong Connector Plug (used on S-58117)	.55
6-32 x 5/16 Phillips Rd. Hd. Mach. Screw (1 used on ea. 166-97)	.03
6-32 x 3/16 Phillips Rd. Hd. Mach. Screw Bright Chrome (used on 166-97)	.03
Release Lever & Antenna Pivot Housing Shaft (2 req'd.)	.15
Three Contact Socket (part of S-48171)	.20
Contact Spring (part of S-48171)	.20
Selector Knob Spring (part of S-58033)	.10
Tension Spring (used on 76-954)	.15
Spring (Handle)	.30
Trim Strip	.50
Support Strip (1 part of ea. S-41853 & S-64592)	.25
Door Mounting Strip - Left	1.60
Door Mounting Strip - Right	1.60
Rubber Strip (2 req'd.)	.05
Spacer Strip (5 req'd.)	.03
Protective Cover Strip	.40
Paper Strip (1 part of ea. S-41853 & S-64592)	.10
Paper Strip (part of S-41853)	.40
Felt Strip (2 used on 12KT40Z8)	.10
Retaining Strip	.03
Trim Strip - Trans-Oceanic (part of S-58124)	2.50
Trim Strip	1.50
Paper Strip (part of S-64592)	.35
Terminal	.05
Shakeproof Terminal (part of S-48171)	.03
Wire Retaining Terminal	.03
Terminal	.05
Spade Terminal	.03
Lockwasher (1 used on ea. 54-12)	.03
.290 x 9/16 x .031 Washer - Cadmium (1 used on ea. 112-1451)	.03
Fibre Washer (part of S-48171)	.03
Spacer Washer (2 req'd.)	.05
Steel Washer (used on 344-1 or 44-34)	.03
Spacer Bushing (4 used on 57-2371)	.05
Transistor Layout Label	
Vinyl Material - End Plates (part of S-41853)	.30
Vinyl Material - Inside Top Door (part of S-58124)	.55
Vinyl Material - Lower Front Door (part of S-58122)	1.25
Vinyl Material - Cabinet Support Bracket	1.50
Vinyl Material - End Plates (part of S-64592)	.50
4-40 x 7/32 Phillips Truss Hd. Mach. Screw - Bright Chrome (2 used on ea. 12-2604 & 76-954)	.03
2-32 x 11/32 Fillister Hd. Self-tap. Screw (5 req'd.)	.03
4-24 x 11/32 Special Fillister Hd. Self-tap. Screw - Black Zinc Plate (4 req'd.)	.03
4-40 x 1/4 Special Phillips Rd. Hd. Mach. Screw - Brass (1 used on ea. S-58122 & S-58124)	.03
4-24 x 1/4 Special Phillips Flat Hd. Self-tap. Screw (4 part of S-58122)	.05
5-20 x 3/16 Phillips Pan Hd. Self-tap. Screw (6 used on S-69029)	.03
2-56 x 3/16 Slotted Pan Hd. Self-tap. Screw (4 Mount S-58120)	.03
4-24 x 3/8 Phillips Fillister Hd. Self-tap. Screw (5 used on 83-2741)	.03
4-40 x 3/16 Special Phillips Hd. Mach. Screw (2 part of ea. S-41853 & S-64592)	.03
8-18 x 1/4 Phillips Rd. Hd. Self-tap. Screw (4 used on S-58117)	.05
6-20 x 1/2 Phillips Pan Hd. Self-tap. Screw - Cadmium (4 join S-58117 & 43-311)	.03

PART NO.	DESCRIPTION	PRICE
112-1509	Special Screw (Retains 54-578 part of S-69029)	.05
113-136	6-20 x 1/4 x 1/4 Hex Hd. Self-tap. Screw External Shakeproof Lockwasher (used on 46-1810)	.03
113-152	8-32 x 1/4 x 1/4 Hex Hd. Self-tap. Screw - Cadmium - Internal Shakeproof Lockwasher (used on 12-3697)	.03
114-68	8-32 x 1/4 x 1/4 Hex Hd. Self-tap Screw - Stat. Bronze (used on 12-3697)	
114-77	6-20 x 5/16 x 1/4 Hex Hd. Self-tap. Screw Stat. Bronze (used on 12-3233)	.03
114-87	8-18 x 1/2 x 1/4 Hex Hd. Self-tap. Screw - Stat. Bronze (2 used on 12KT40Z8)	.03
114-615	6-20 x 5/16 x 1/4 Hex Hd. Self-tap. Screw - Cadmium (2 used on S-56299)	.03
114-770	8-32 x 1/4 x 1/4 Slotted Hex Hd. Mach. Screw - Cadmium (used on S-58033)	.03
114-775	4-24 x 5/32 x 3/16 Hex Hd. Self-tap. Screw - Cadmium (1 part of ea. S-41853 & S-64592)	.03
114-785	6-32 x 5/16 x 1/4 Special Hex Hd. Mach. Screw (3 part of ea. S-50774 & S-64592)	.03
114-911	6-32 x 5/16 Slotted Hex Hd. Mach. Screw - Flat Washer Attached - Cadmium (2 used on 12KT40Z8)	.05
117-206	Handle Release Lever	1.75
138-433	Background Grille	1.50
138-434	Grille	3.25
152-292	Handle Support Block	.60
166-97	Plastic Bumper (4 req'd.)	.05
166-105	Rubber Bumper (6 required)	.03
166-106	Bumper (2 req'd.)	.03
188-177	Knob Clamping Ring (1 part of ea. S-58423 & S-65523)	.03
189-276	Plastic Bag	2.50
192-236	Dial Crystal	6.00
196.302	Trim Plate Gasket (part of S-56299)	.15
202-2402	Instruction Book	1.00
202-2595	Shortwave Chart Book	3.05
S-41778	Spring & Stud Assembly - R.H. (part of S-41853)	.30
S-41780	Spring & Stud Assembly - L.H. (part of S-64592)	.30
S-41853	End Plate Assembly (Right)	
S-42206	Antenna Pivot Housing, Sleeve & Shaft Assembly	2.50
S-42207	Telescopic Antenna Assembly	5.50
S-43259	Handle & Pin Assembly	1.00
S-43594	Wavemagnet Winding Assembly	4.50
S-48171	Battery Case & Wire Assembly	4.25
S-56299	Trim Plate (Tuning) & Gasket Assembly	1.25
S-58033	Band Selector Knob Assembly	3.35
S-58115	Cabinet Support Bracket Assembly	5.00
S-58117	Wavemagnet Mounting Strip & Latch Spring Assembly	.80
S-58120	Log Chart Retaining Plate & Compass Disc Assembly	5.00
S-58122	Lower Door Assembly	12.50
S-58124	Top Door Assembly	7.50
S-58423	Knob & Ring Assembly - Volume & Tone (2 req'd.)	1.25
S-64592	End Plate Assembly (Left)	
S-65523	Tuning Knob & Ring Assembly	1.75
S-69029	Rear Door Assembly	

DIAL CORD DRIVE

SHOWN IN FULL COUNTERCLOCKWISE POSITION

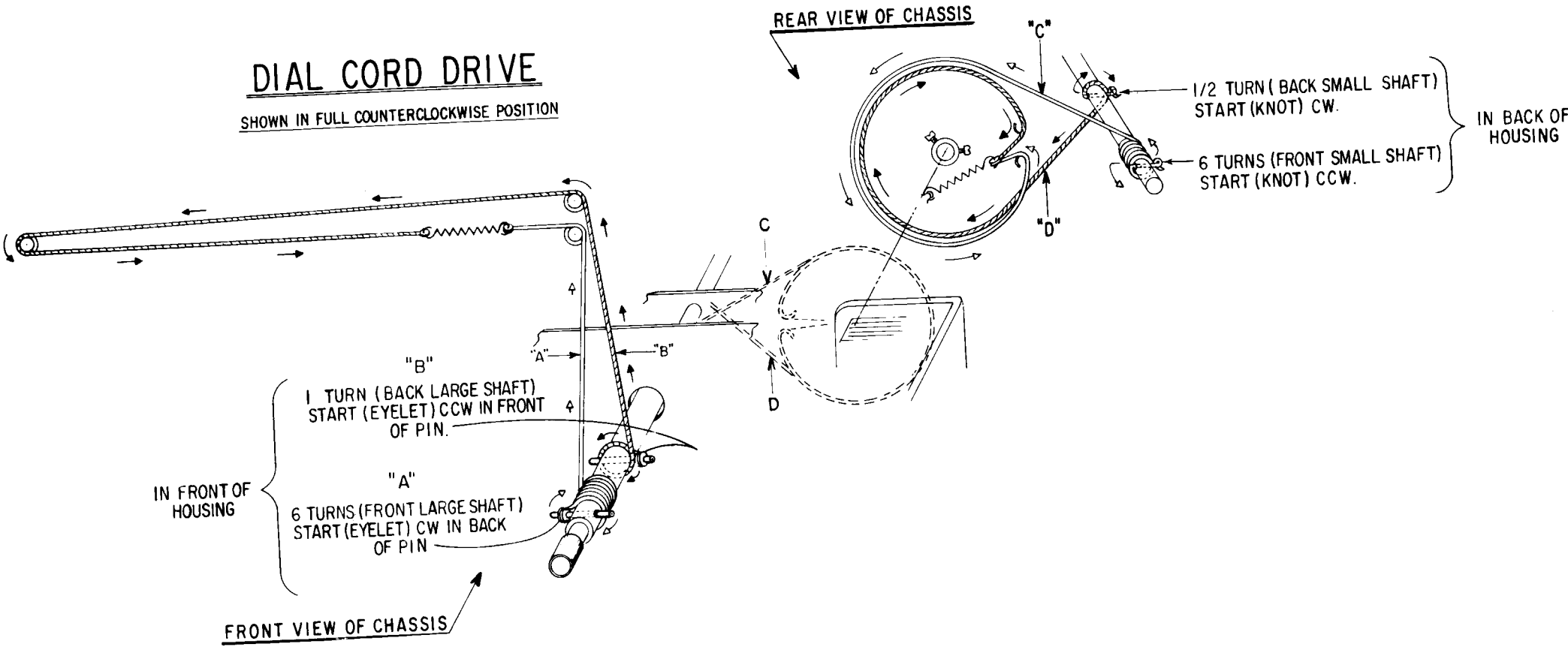

Chassis 12KT40Z8	F.M.-RF.	FM-Osc. Mixer	AM-RF	AM-Mixer	AM-Oscillator	AM-FM 1st IF.	AM-FM 2nd IF.	AM-FM 3rd IF.	1st Audio	Driver	Output Matched Pair	Supplier
Zenith Part No.	121-294	121-295	121-44	121-351	121-350	121-352	121-352	121-352	121-374	121-375	121-373	Amperex
EIA No.	2N2654	2N2654	2N2089	2N2092	2N2089	2N2089	2N2089	2N2089	2N2439	2N2438	2N2431	

FM (88 - 108 MC) ALIGNMENT PROCEDURE

OPER.	INPUT SIGNAL FREQUENCY	CONNECT GENERATOR TO	SET DIAL AT	ADJUST TRIMMERS	PURPOSE	PLACE V.T.V.M. METER
1.	10.7 MC modulated	* Test Point "B"	98 MC	L105, L106, L28, L29, L32, L33, L-36	For I.F. alignment	Across voice coil & reduce input so output is not greater than .4 volts.
2.	10.7 MC modulated	* Test Point "B"	98 MC	Adjust L37 for zero DC reading on center indicating DC VTVM	Align ratio detector	Place probe on pin 6 of Ratio Detector & adjust L37 to zero after determining that there is a symmetrical swing around this zero point.
3.	98 MC modulated	** FM antenna terminals	98 MC	L103	Set oscillator to dial scale.	Across voice coil
4.	98 MC modulated	** FM antenna terminals	98 MC	L101, L102	Align antenna & detector stages	Across voice coil.

* Probe from generator should be isolated through A .05 MFD. capacitor.

** Probe from generator should be terminated with proper resistor to match 72 ohm line impedance.

AM ALIGNMENT PROCEDURE

OPER.	CONNECT GEN. TO DUMMY ANTENNA	INPUT SIG. FREQUENCY	BAND	SET DIAL AT	TRIMMERS	PURPOSE
1	One turn loop coupled loosely to Broadcast Wavemagnet	455 Kc	BC	1600 Kc	T1, T2, T4, T5, T7, T8, T10	Align I.F.
*2	One turn coupled loosely to Long Wave Wavemagnet	160 Kc	LW	160 Kc	Rock Gang, Adjust 5E	Alignment of LW at 160 Kc
*3	One Turn Loop Loosely to Long Wave Wavemagnet	400 Kc	LW	400 Kc	5D	Set osc. to scale
4		REPEAT OPERATIONS 2 & 3				
*5		160 Kc	LW	160 Kc	Rock, adjust L17B	Alignment LW mixer at 160 Kc
*6		375 Kc	LW	375 Kc	5A	Alignment LW mixer
7		REPEAT OPERATIONS 5 & 6				
*8		375 Kc	LW	375 Kc	C33	Alignment of LW antenna
*9	One turn loop coupled loosely to Broadcast Wavemagnet	600 Kc	BC	600 Kc	Rock Gang, Adjust C47	Alignment of BC at 600 Kc
10		1600 Kc	BC	1600 Kc	5C	Set osc. to scale
11	One Turn Loop Coupled Loosely to Broadcast Wavemagnet	REPEAT OPERATIONS 9 & 10				
*12		600 Kc	BC	600 Kc	Rock, adjust L17A	Alignment of BC mixer at 600 Kc
13		1400 Kc	BC	1400 Kc	5B	Alignment BC mixer
14		REPEAT OPERATIONS 12 & 13				
15		1400 Kc	BC	1400 Kc	C32	Alignment of BC antenna
*16	3 Feet of Wire Approximately 1 Foot and Parallel from Extended Waverod	2.1 Mc	2-4 Mc	2.1 Mc	Rock L23, L17, L6	Alignment of SW osc., mixer & antenna
17		3.9 Mc	2-4 Mc	3.9 Mc	6F, 6D, 6B	Alignment of SW osc., mixer & antenna
18		REPEAT OPERATIONS 17 & 18				
* 19		4.25 Mc	4-9 Mc	4.25 Mc	Rock L22, L15, L5	Alignment of Short Wave Oscillator, Mixer and Antenna
20		8.75 Mc	4-9 Mc	8.75 Mc	6E, 6C, 6A	
21		REPEAT OPERATIONS 20 & 21				
22		9.7 Mc	31 meters	9.7 Mc	L21, L14, L4	
23		11.8 Mc	25 meters	11.8 Mc	L20, L13, L3	
24		15.2 Mc	19 meters	15.2 Mc	L19, L12, L2	
25		17.8 Mc	16 meters	17.8 Mc	L18, L11, L1	

* NOTE: Rock tuning condenser when making alignment under Operations 2, 3, 5, 6, 8, 9, 12, 16 & 19.

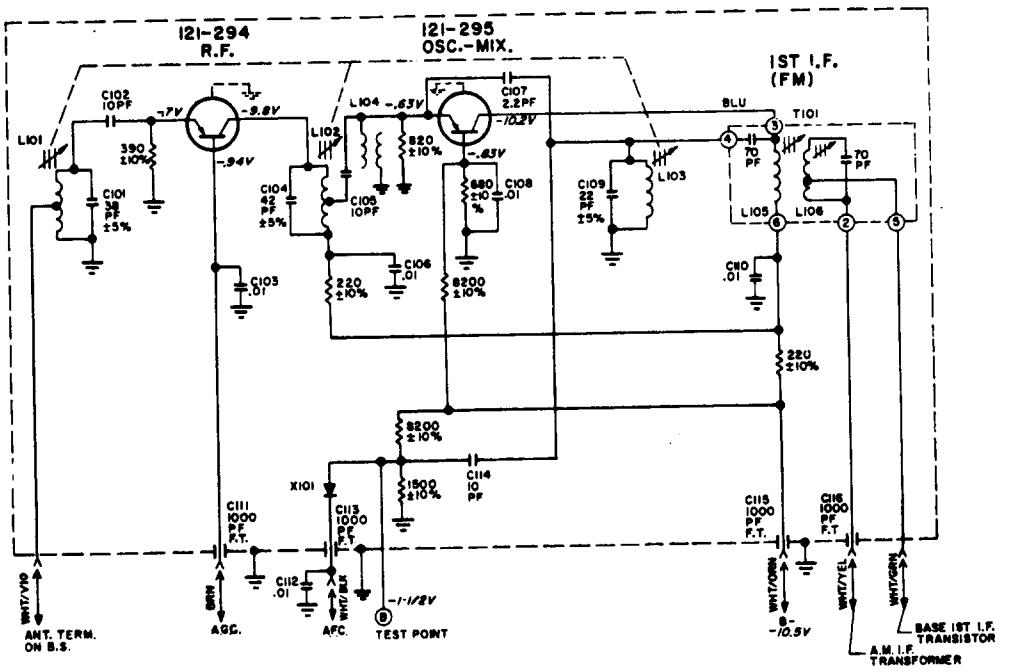

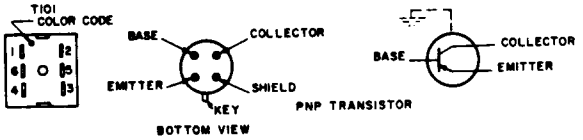

NOTES:

1. ALL RESISTORS ±20% TOLERANCE, 1/4 WATT, CARBON UNLESS OTHERWISE SPECIFIED.
2. RESISTANCE VALUES IN OHMS, CAPACITANCE IN MICROFARADS UNLESS OTHERWISE SPECIFIED.
3. ALL VOLTAGES ARE D.C. UNLESS OTHERWISE SPECIFIED.
4. D.C. VOLTAGES SHOWN ARE MEASURED WITH NO SIGNAL USING A VACUUM TUBE VOLT METER.
5. NO SIGNAL DRAIN IS 5 MA.

DENOTES CHASSIS

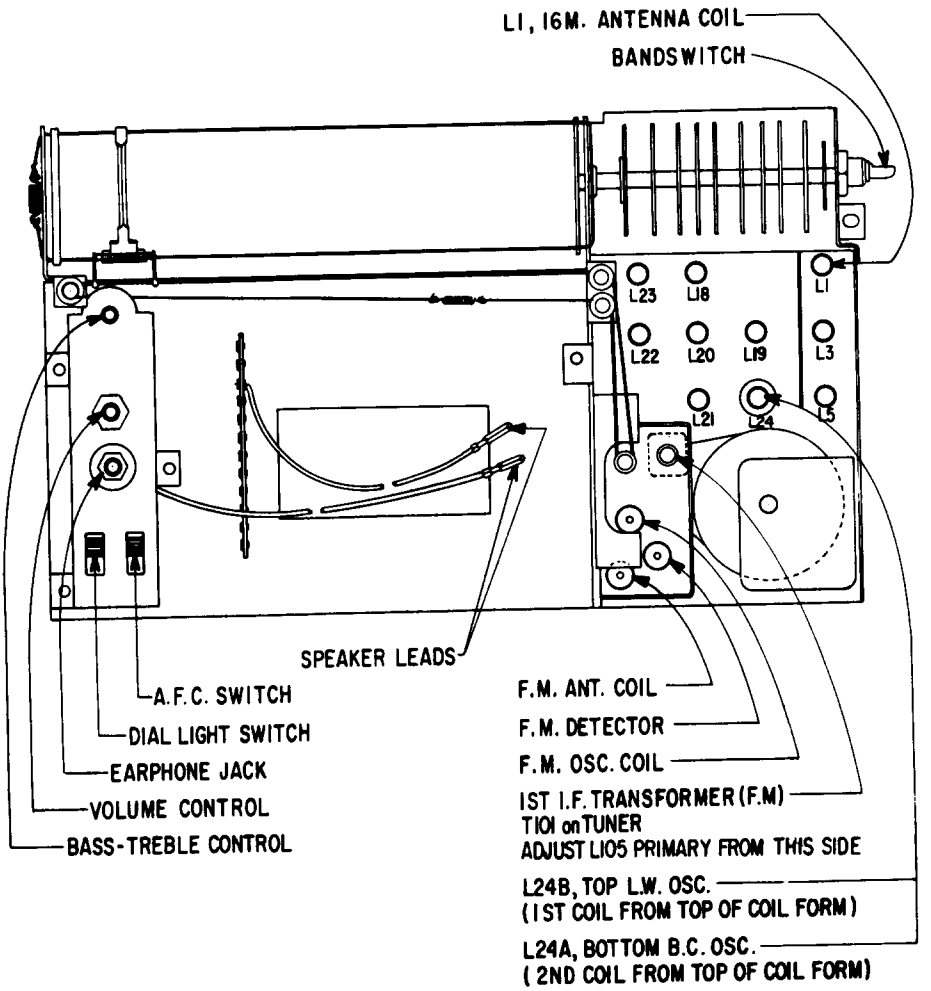

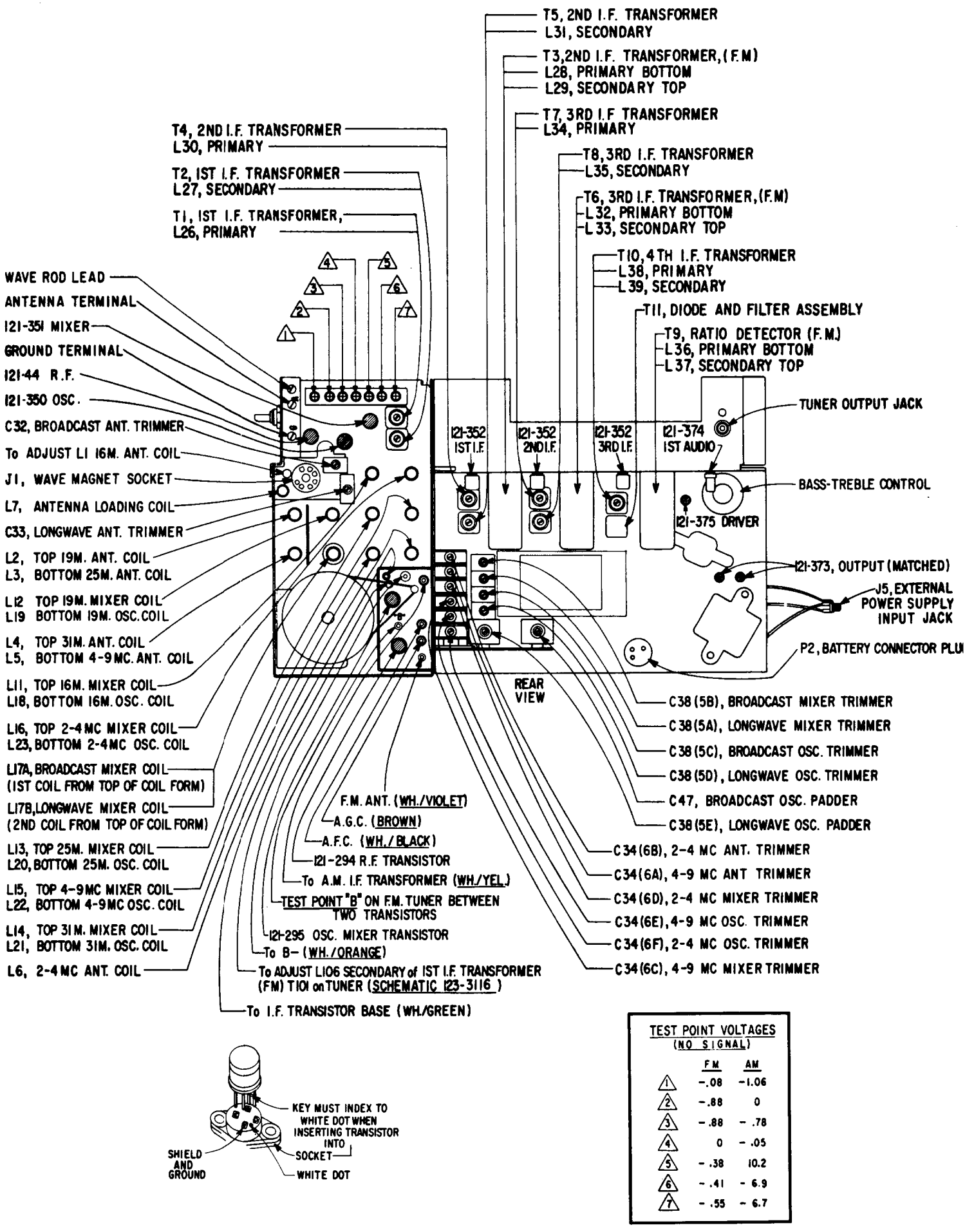

TEST POINT VOLTAGES
(NO SIGNAL)

	FM	AM
1	-.08	-1.06
2	-.88	0
3	-.88	-.78
4	0	-.05
5	-.38	10.2
6	-.41	-6.9
7	-.55	-6.7

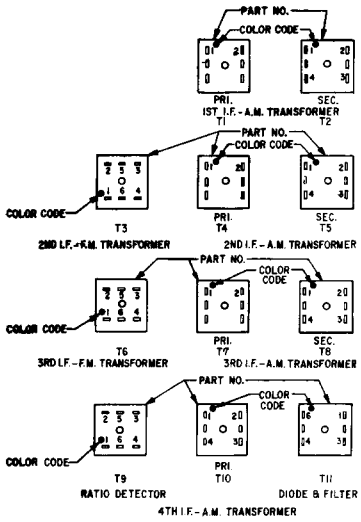
PART NO.
COLOR CODE
PRI.
SEC.
IST I.F.-A.M. TRANSFORMER
T1
T2
T3
T4
T5
2ND I.F.-F.M. TRANSFORMER
2ND I.F.-A.M. TRANSFORMER
T6
T7
T8
3RD I.F.-F.M. TRANSFORMER
3RD I.F.-A.M. TRANSFORMER
T9
T10
T11
RATIO DETECTOR
DIODE & FILTER ASSEM.
4TH I.F.-A.M. TRANSFORMER

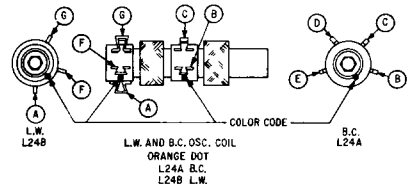
L.W.
L24B
L.W. AND B.C. OSC. COIL
ORANGE DOT
L24A B.C.
L24B L.W.
COLOR CODE
B.C.
L24A

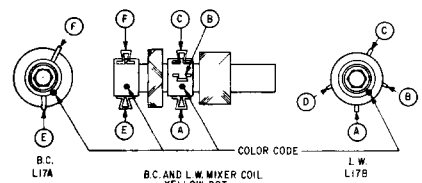
B.C.
L17A
B.C. AND L.W. MIXER COIL
YELLOW DOT
L17A B.C.
L17B L.W.
COLOR CODE
L.W.
L17B

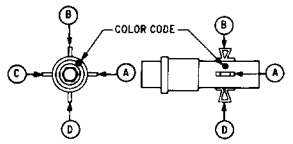
COLOR CODE
SHORTWAVE OSC. COIL
ORANGE DOT
L18 TO L23 INCL.
SHORTWAVE MIXER COIL
YELLOW DOT
L11 TO L16 INCL.

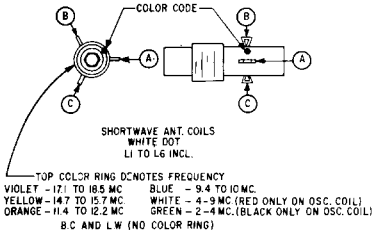
COLOR CODE
SHORTWAVE ANT. COILS
WHITE DOT
L1 TO L6 INCL.
TOP COLOR RING DENOTES FREQUENCY
VIOLET - 17.1 TO 18.5 MC
YELLOW - 14.7 TO 15.7 MC
ORANGE - 11.4 TO 12.2 MC
BLUE - 9.4 TO 10 MC.
WHITE - 4-9 MC (RED ONLY ON OSC. COIL)
GREEN - 2-4 MC. (BLACK ONLY ON OSC. COIL)
B.C AND L.W (NO COLOR RING)

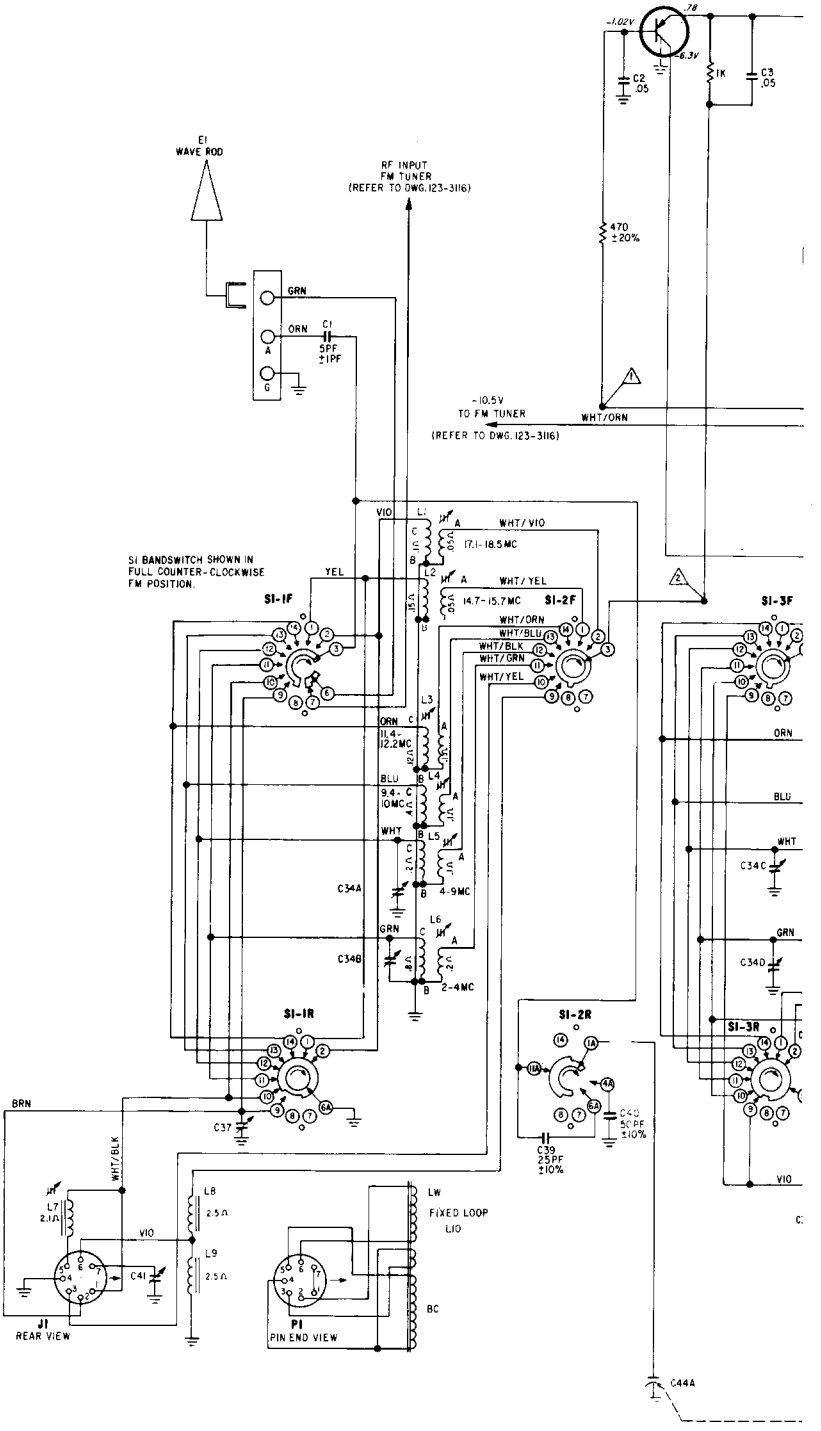
121-44
A.M.-R.F.
AM-IF SEC.
(REFER TO D
-1.02V
6.3V
C2 .05
1K
C3 .05
470 ±20%
E1 WAVE ROD
RF INPUT FM TUNER (REFER TO DWG. 123-3116)
GRN
ORN
C1 5PF ±1PF
-10.5V TO FM TUNER (REFER TO DWG. 123-3116)
WHT/ORN
VIO
WHT/VIO
17.1-18.5 MC
YEL
WHT/YEL
14.7-15.7 MC
S1 BANDSWITCH SHOWN IN FULL COUNTER-CLOCKWISE FM POSITION.
S1-1F
S1-2F
S1-3F
WHT/ORN
WHT/BLU
WHT/BLK
WHT/GRN
WHT/YEL
ORN
11.4-12.2MC
BLU
9.4-10MC
WHT
4-9MC
GRN
2-4MC
C34A
C34B
C34C
C34D
S1-1R
S1-2R
S1-3R
BRN
C37
C39 25PF ±10%
C40 50PF ±10%
WHT/BLK
L7 2.5Λ
L8 2.5Λ
L9 2.5Λ
C41
VIO
LW
FIXED LOOP
L10
BC
J1
REAR VIEW
P1
PIN END VIEW
C44A

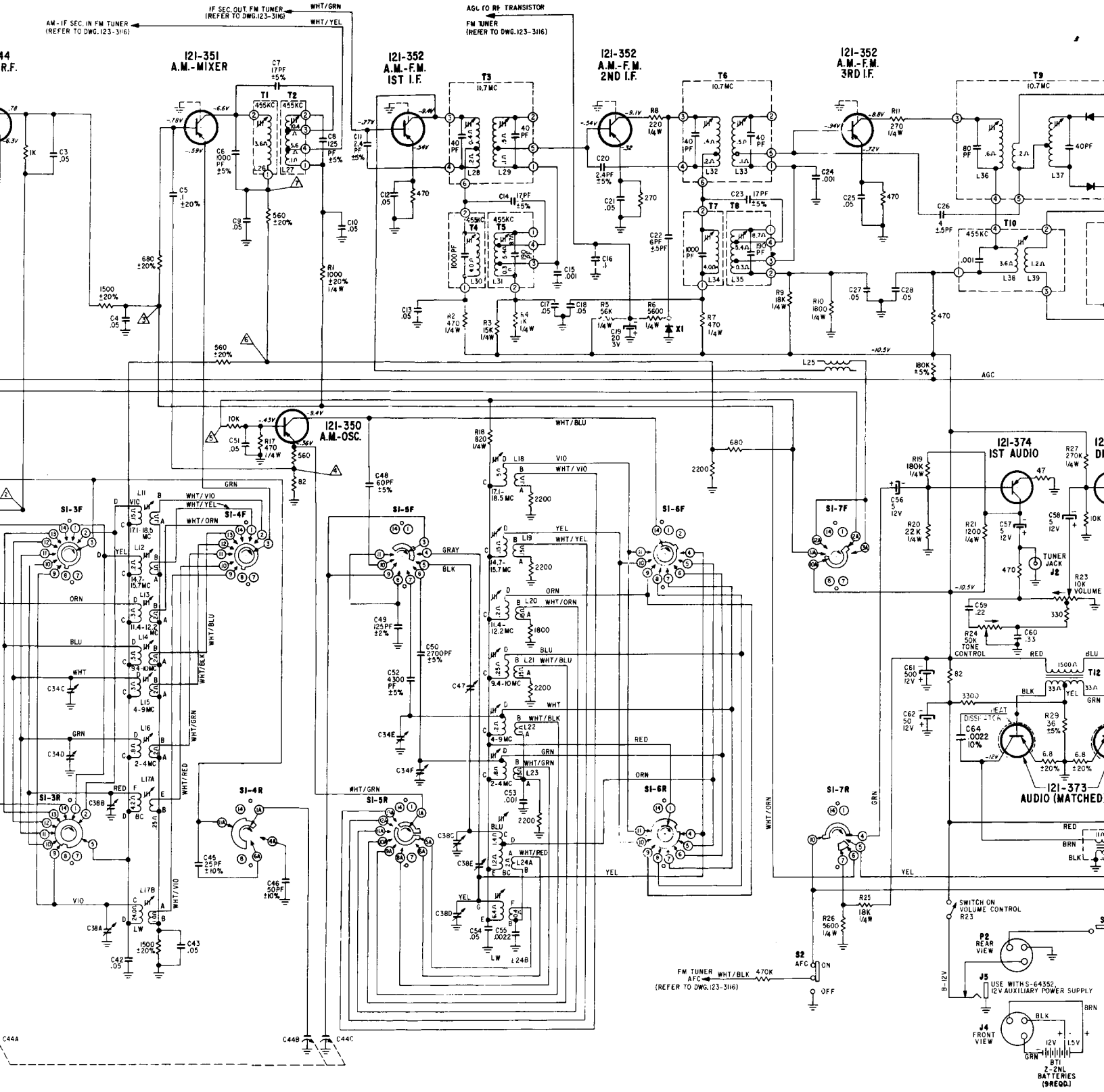
IF SEC. OUT FM TUNER (REFER TO DWG. 123-3116)
WHT/GRN
WHT/YEL
AM-IF SEC. IN FM TUNER (REFER TO DWG. 123-3116)
AGC TO RF TRANSISTOR
FM TUNER (REFER TO DWG. 123-3116)
121-351 A.M.-MIXER
121-352 A.M.-F.M. IST I.F.
121-352 A.M.-F.M. 2ND I.F.
121-352 A.M.-F.M. 3RD I.F.
121-350 A.M.-OSC.
121-374 IST AUDIO
121-373 AUDIO (MATCHED
T1
T2
T3 10.7MC
T4
T5
T6 10.7MC
T7
T8
T9 10.7MC
T10
T12
X1
L25
AGC
-10.5V
TUNER JACK J2
R23 10K VOLUME
R24 50K TONE CONTROL
SI-3F
SI-4F
SI-5F
SI-6F
SI-7F
SI-3R
SI-4R
SI-5R
SI-6R
SI-7R
S2 AFC ON OFF
FM TUNER AFC WHT/BLK 470K (REFER TO DWG. 123-3116)
SWITCH ON VOLUME CONTROL R23
P2 REAR VIEW
J5 USE WITH S-64352, 12V AUXILIARY POWER SUPPLY
J4 FRONT VIEW
B-12V
12V
15V
BTI Z-2NL BATTERIES (9REQD.)
HEAT DISSIPATOR

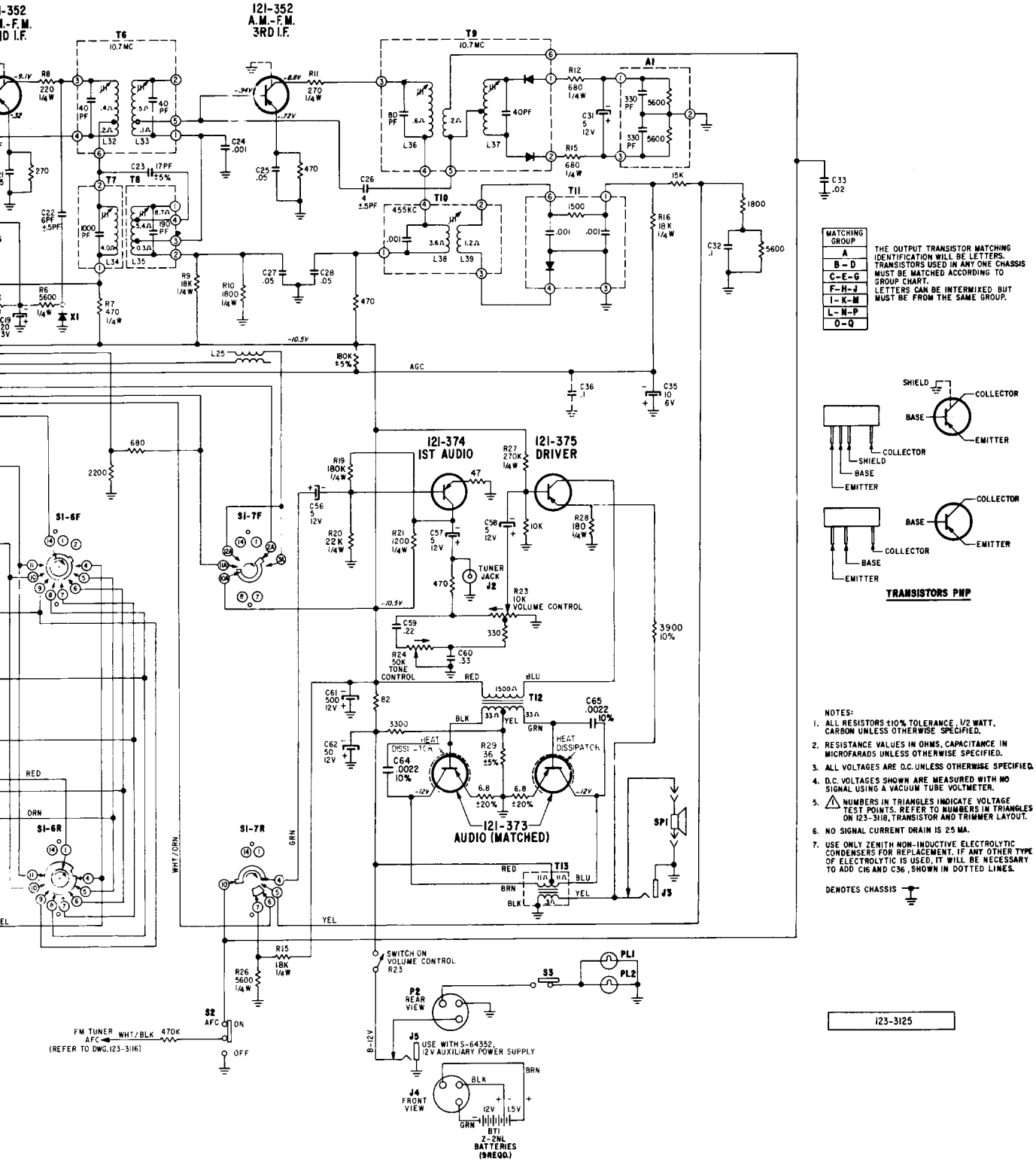

MATCHING GROUP
A
B - D
C-E-G
F-H-J
I-K-M
L-N-P
O-Q

THE OUTPUT TRANSISTOR MATCHING IDENTIFICATION WILL BE LETTERS. TRANSISTORS USED IN ANY ONE CHASSIS MUST BE MATCHED ACCORDING TO GROUP CHART. LETTERS CAN BE INTERMIXED BUT MUST BE FROM THE SAME GROUP.

TRANSISTORS PNP

NOTES:

1. ALL RESISTORS ±10% TOLERANCE, 1/2 WATT, CARBON UNLESS OTHERWISE SPECIFIED.
2. RESISTANCE VALUES IN OHMS, CAPACITANCE IN MICROFARADS UNLESS OTHERWISE SPECIFIED.
3. ALL VOLTAGES ARE D.C. UNLESS OTHERWISE SPECIFIED.
4. D.C. VOLTAGES SHOWN ARE MEASURED WITH NO SIGNAL USING A VACUUM TUBE VOLTMETER.
5. ⚠ NUMBERS IN TRIANGLES INDICATE VOLTAGE TEST POINTS. REFER TO NUMBERS IN TRIANGLES ON 123-3118, TRANSISTOR AND TRIMMER LAYOUT.
6. NO SIGNAL CURRENT DRAIN IS 25 MA.
7. USE ONLY ZENITH NON-INDUCTIVE ELECTROLYTIC CONDENSERS FOR REPLACEMENT. IF ANY OTHER TYPE OF ELECTROLYTIC IS USED, IT WILL BE NECESSARY TO ADD C16 AND C36, SHOWN IN DOTTED LINES.

DENOTES CHASSIS

123-3125

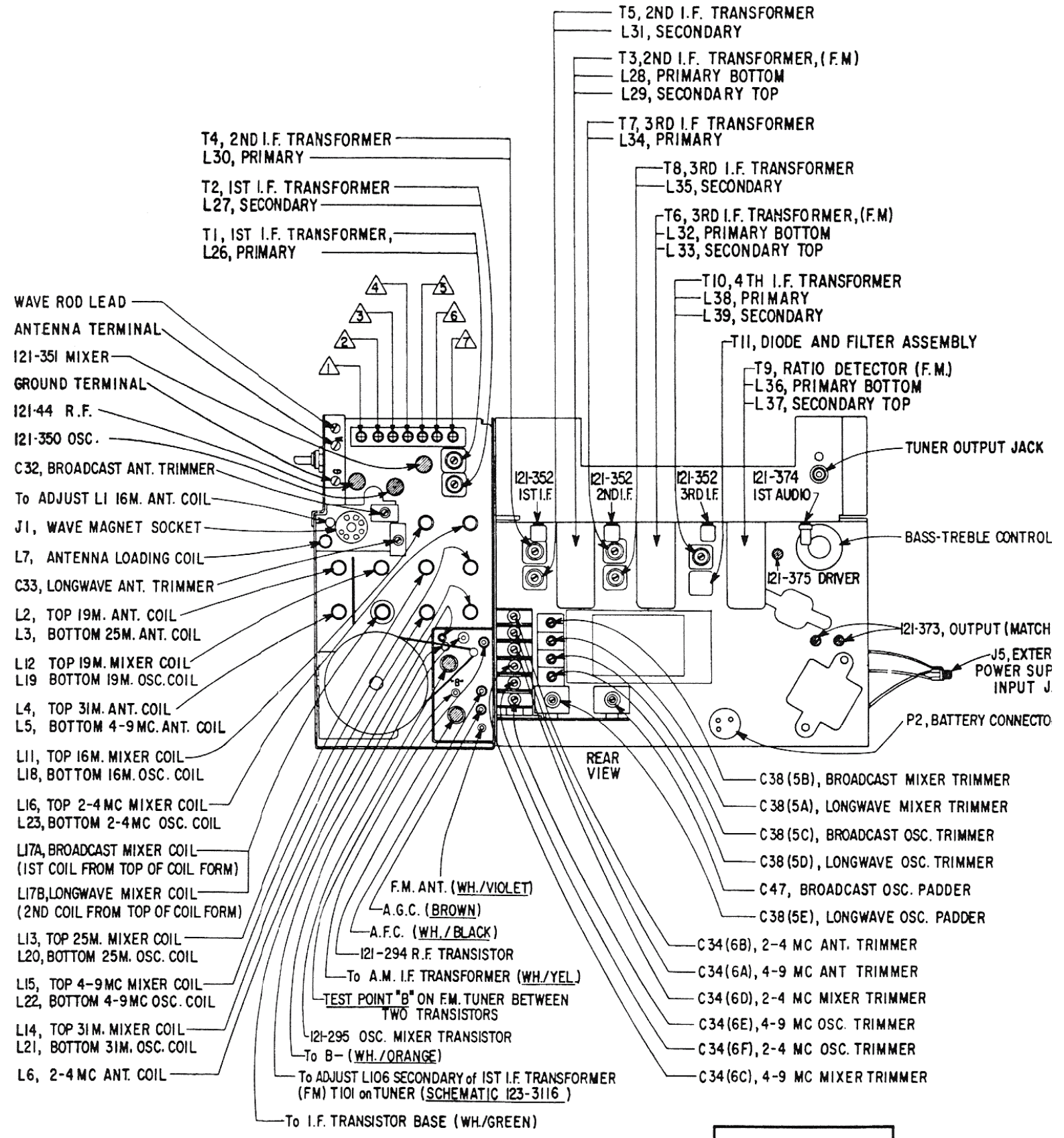

TEST POINT VOLTAGES
(NO SIGNAL)

	FM	AM
1	-.08	-1.06
2	-.88	0
3	-.88	-.78
4	0	-.05
5	-.38	10.2
6	-.41	-6.9
7	-.55	-6.7

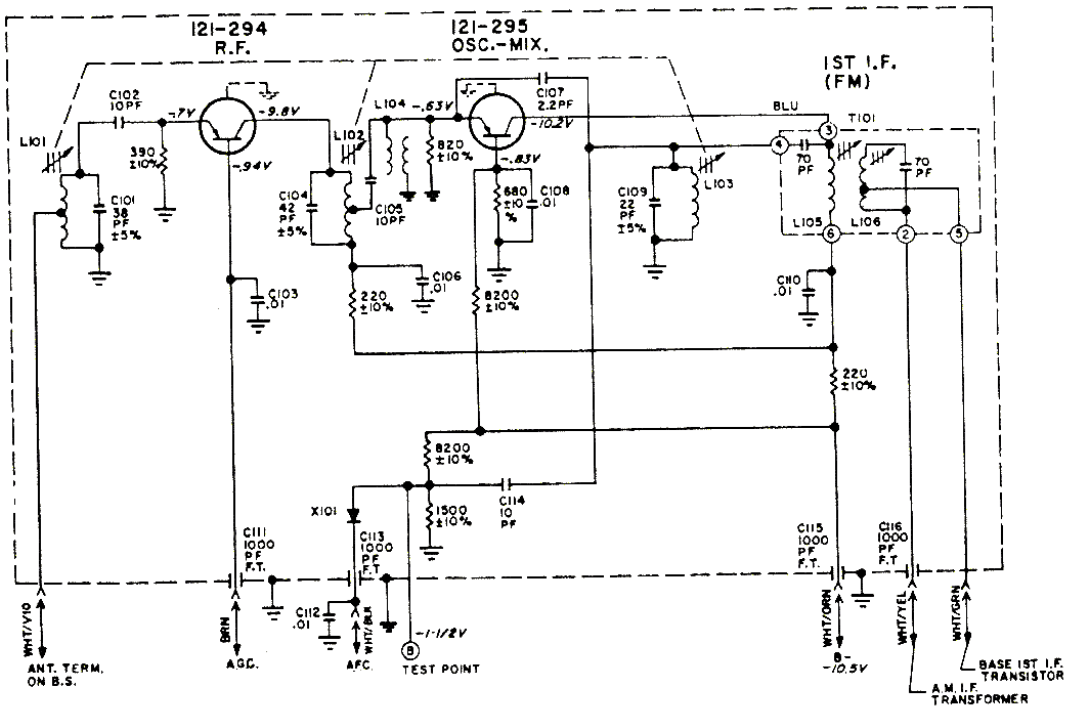

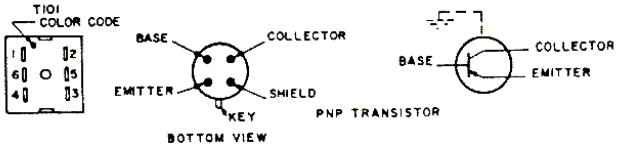

NOTES:

1. ALL RESISTORS ±20% TOLERANCE, 1/4 WATT, CARBON UNLESS OTHERWISE SPECIFIED.
2. RESISTANCE VALUES IN OHMS, CAPACITANCE IN MICROFARADS UNLESS OTHERWISE SPECIFIED.
3. ALL VOLTAGES ARE D.C. UNLESS OTHERWISE SPECIFIED.
4. D.C. VOLTAGES SHOWN ARE MEASURED WITH NO SIGNAL USING A VACUUM TUBE VOLT METER.
5. NO SIGNAL DRAIN IS 5 MA.

DENOTES CHASSIS

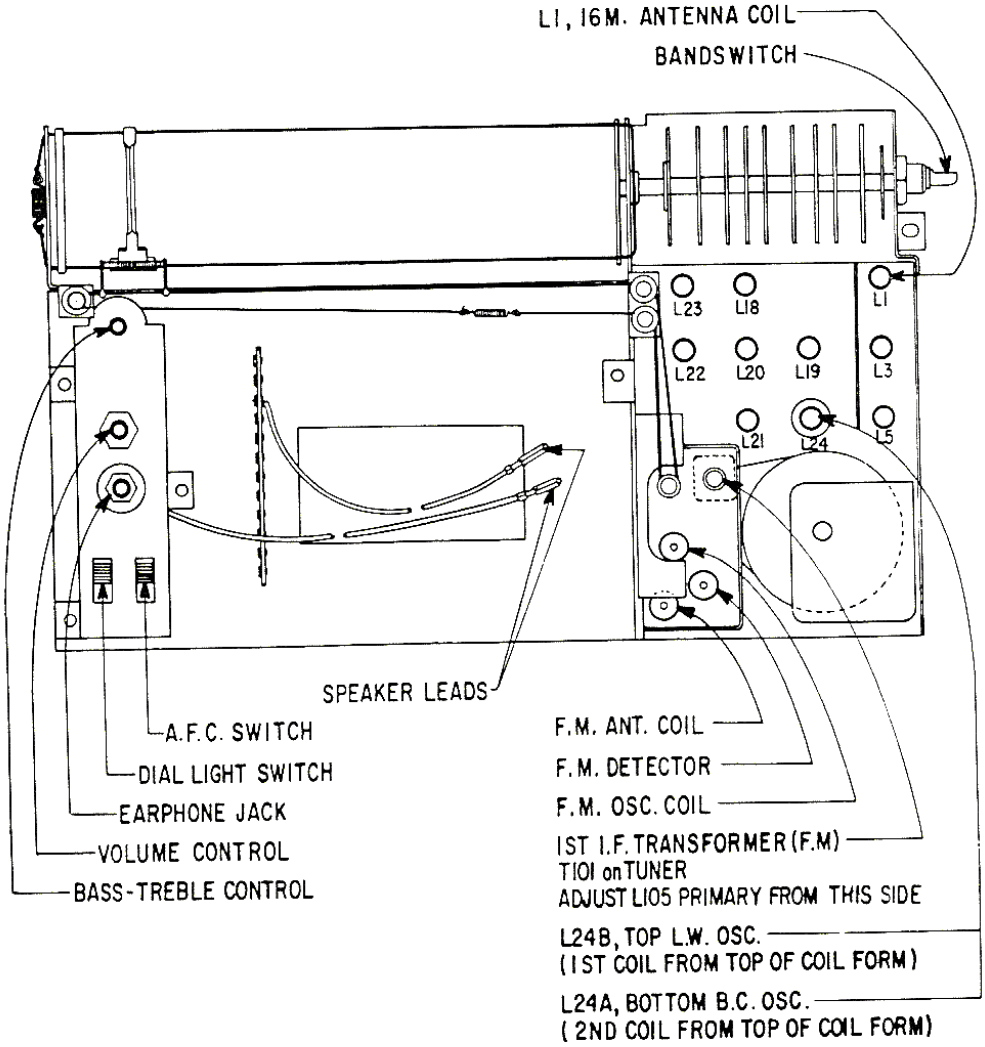

FM (88 - 108 MC) ALIGNMENT PROCEDURE

OPER.	INPUT SIGNAL FREQUENCY	CONNECT GENERATOR TO	SET DIAL AT	ADJUST TRIMMERS	PURPOSE	PLACE V.T.V.M. METER
1.	10.7 MC modulated	* Test Point "B"	98 MC	L105, L106, L28, L29, L32, L33, L-36	For I.F. alignment	Across voice coil & reduce input so output is not greater than .4 volts.
2.	10.7 MC modulated	* Test Point "B"	98 MC	Adjust L37 for zero DC reading on center indicating DC VTVM	Align ratio detector	Place probe on pin 6 of Ratio Detector & adjust L37 to zero after determining that there is a symmetrical swing around this zero point.
3.	98 MC modulated	** FM antenna terminals	98 MC	L103	Set oscillator to dial scale.	Across voice coil
4.	98 MC modulated	** FM antenna terminals	98 MC	L101, L102	Align antenna & detector stages	Across voice coil.

* Probe from generator should be isolated through A .05 MFD. capacitor.

** Probe from generator should be terminated with proper resistor to match 72 ohm line impedance.

AM ALIGNMENT PROCEDURE

OPER.	CONNECT GEN. TO DUMMY ANTENNA	INPUT SIG. FREQUENCY	BAND	SET DIAL AT	TRIMMERS	PURPOSE
1	One turn loop coupled loosely to Broadcast Wavemagnet	455 Kc	BC	1600 Kc	T1, T2, T4, T5, T7, T8, T10	Align I.F.
*2	One turn coupled loosely to Long Wave Wavemagnet	160 Kc	LW	160 Kc	Rock Gang, Adjust 5E	Alignment of LW at 160 Kc
*3	One Turn Loop Loosely to Long Wave Wavemagnet	400 Kc	LW	400 Kc	5D	Set osc. to scale
4		REPEAT OPERATIONS 2 & 3				
*5		160 Kc	LW	160 Kc	Rock, adjust L17B	Alignment LW mixer at 160 Kc
*6		375 Kc	LW	375 Kc	5A	Alignment LW mixer
7		REPEAT OPERATIONS 5 & 6				
*8		375 Kc	LW	375 Kc	C33	Alignment of LW antenna
*9	One turn loop coupled loosely to Broadcast Wavemagnet	600 Kc	BC	600 Kc	Rock Gang, Adjust C47	Alignment of BC at 600 Kc
10		1600 Kc	BC	1600 Kc	5C	Set osc. to scale
11	One Turn Loop Coupled Loosely to Broadcast Wavemagnet	REPEAT OPERATIONS 9 & 10				
*12		600 Kc	BC	600 Kc	Rock, adjust L17A	Alignment of BC mixer at 600 Kc
13		1400 Kc	BC	1400 Kc	5B	Alignment BC mixer
14		REPEAT OPERATIONS 12 & 13				
15		1400 Kc	BC	1400 Kc	C32	Alignment of BC antenna
*16	3 Feet of Wire Approximately 1 Foot and Parallel from Extended Waverod	2.1 Mc	2-4 Mc	2.1 Mc	Rock L23, L17, L6	Alignment of SW osc., mixer & antenna
17		3.9 Mc	2-4 Mc	3.9 Mc	6F, 6D, 6B	Alignment of SW osc., mixer & antenna
18		REPEAT OPERATIONS 17 & 18				
* 19		4.25 Mc	4-9 Mc	4.25 Mc	Rock L22, L15, L5	Alignment of Short Wave Oscillator, Mixer and Antenna
20		8.75 Mc	4-9 Mc	8.75 Mc	6E, 6C, 6A	
21		REPEAT OPERATIONS 20 & 21				
22		9.7 Mc	31 meters	9.7 Mc	L21, L14, L4	
23		11.8 Mc	25 meters	11.8 Mc	L20, L13, L3	
24		15.2 Mc	19 meters	15.2 Mc	L19, L12, L2	
25		17.8 Mc	16 meters	17.8 Mc	L18, L11, L1	

* NOTE: Rock tuning condenser when making alignment under Operations 2, 3, 5, 6, 8, 9, 12, 16 & 19.

DIAL CORD DRIVE

SHOWN IN FULL COUNTERCLOCKWISE POSITION

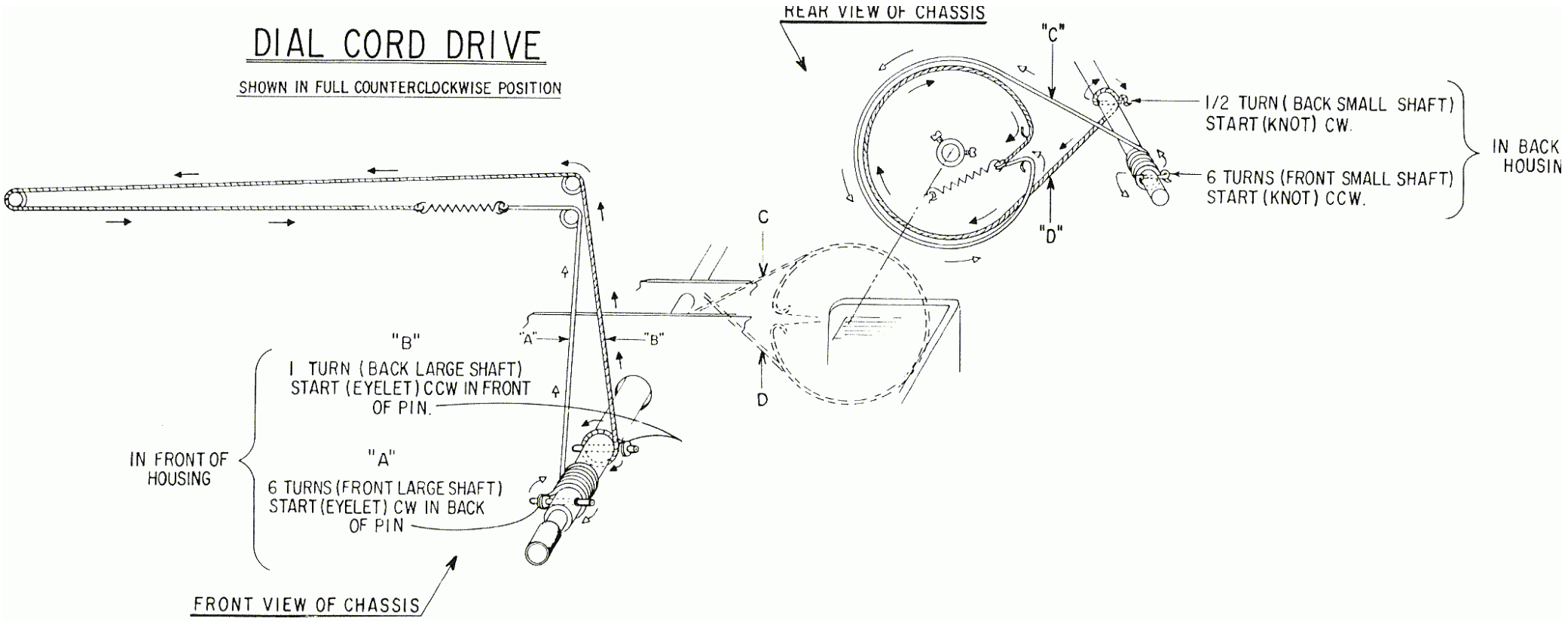

Chassis 12KT40Z8	F.M.-RF.	FM-Osc. Mixer	AM-RF	AM-Mixer	AM-Oscillator	AM-FM 1st IF.	AM-FM 2nd IF.	AM-FM 3rd IF.	1st Audio	Driver	Output Matched Pair	Supplier
Zenith Part No.	121-294	121-295	121-44	121-351	121-350	121-352	121-352	121-352	121-374	121-375	121-373	Amperex
EIA No.	2N2654	2N2654	2N2089	2N2092	2N2089	2N2089	2N2089	2N2089	2N2439	2N2438	2N2431	

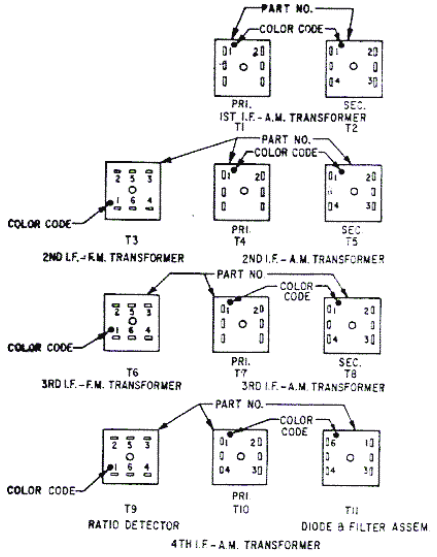
PART NO.
COLOR CODE
PRI.
SEC.
1ST I.F.-A.M. TRANSFORMER
T1
T2
T3
2ND I.F.-F.M. TRANSFORMER
T4
T5
2ND I.F.-A.M. TRANSFORMER
T6
3RD I.F.-F.M. TRANSFORMER
T7
T8
3RD I.F.-A.M. TRANSFORMER
T9
RATIO DETECTOR
T10
T11
DIODE & FILTER ASSEM
4TH I.F.-A.M. TRANSFORMER

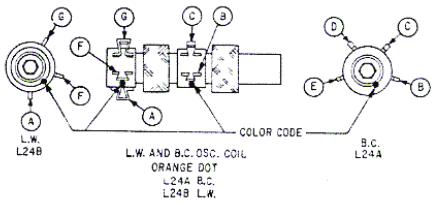
COLOR CODE
L.W.
L24B
L.W. AND B.C. OSC. COIL
ORANGE DOT
L24A B.C.
L24B L.W.
B.C.
L24A

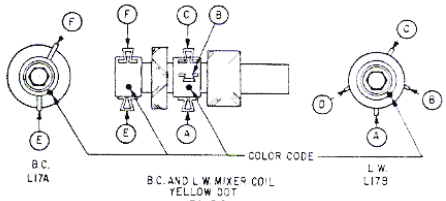
COLOR CODE
B.C.
L17A
B.C. AND L.W. MIXER COIL
YELLOW DOT
L17A B.C.
L17B L.W.
L.W.
L17B

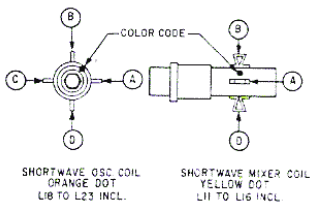
COLOR CODE
SHORTWAVE OSC. COIL
ORANGE DOT
L18 TO L23 INCL.
SHORTWAVE MIXER COIL
YELLOW DOT
L11 TO L16 INCL.

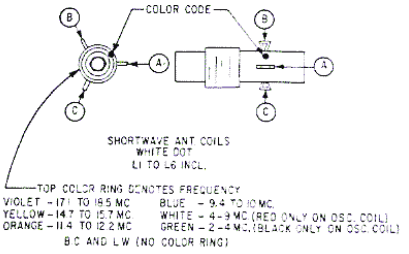
COLOR CODE
SHORTWAVE ANT COILS
WHITE DOT
L1 TO L6 INCL.
TOP COLOR RING DENOTES FREQUENCY
VIOLET - 17.1 TO 18.5 MC
YELLOW - 14.7 TO 15.7 MC
ORANGE - 11.4 TO 12.2 MC
BLUE - 9.4 TO 10 MC.
WHITE - 4-9 MC (RED ONLY ON OSC. COIL)
GREEN - 2-4 MC. (BLACK ONLY ON OSC. COIL)
B.C. AND L.W. (NO COLOR RING)

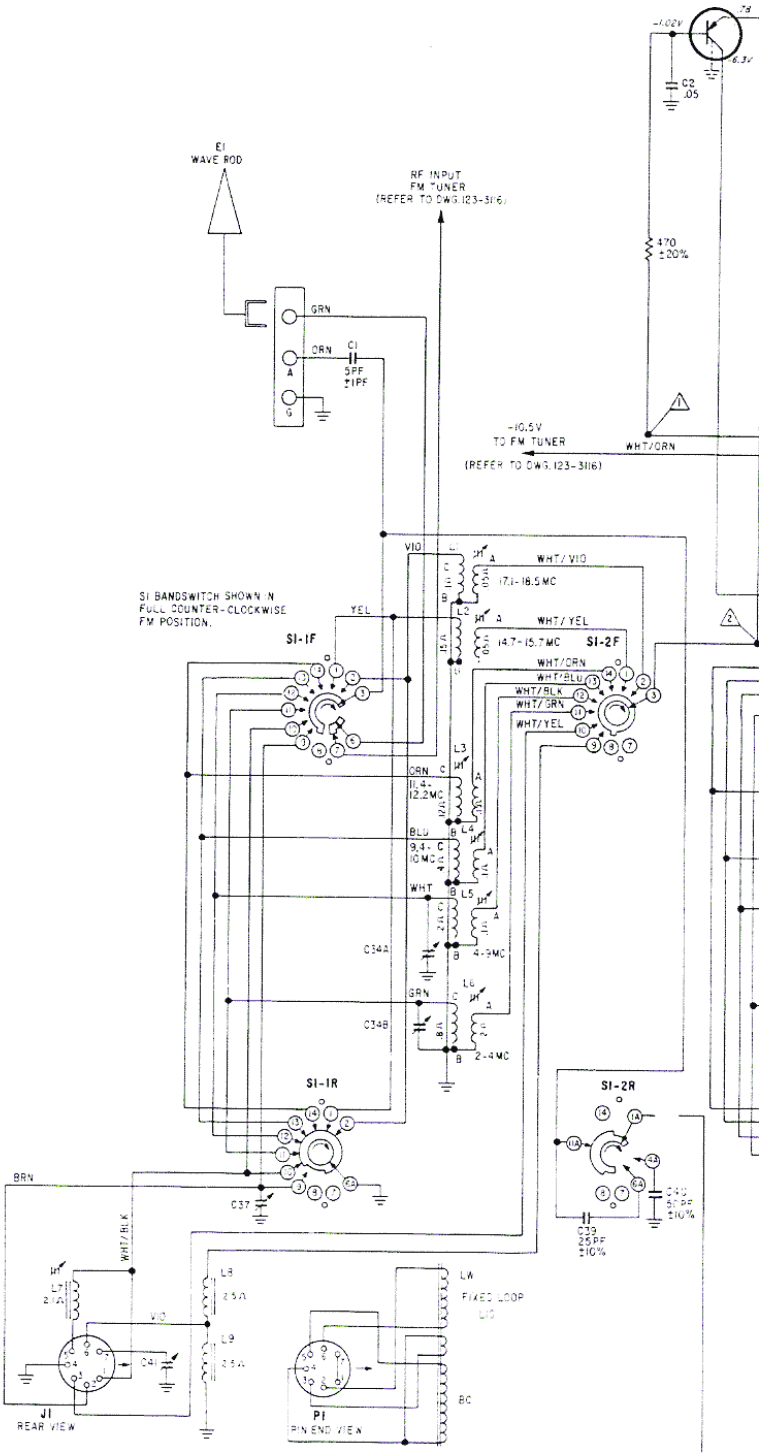
121-44
A.M.-R.F.
E1
WAVE ROD
RF INPUT
FM TUNER
(REFER TO DWG. 123-3116)
GRN
ORN
C1
5PF
±1PF
-10.5V
TO FM TUNER
(REFER TO DWG. 123-3116)
WHT/ORN
470
±20%
C2
.05
S1 BANDSWITCH SHOWN IN
FULL COUNTER-CLOCKWISE
FM POSITION.
S1-1F
S1-2F
S1-1R
S1-2R
WHT/VIO
17.1-18.5 MC
WHT/YEL
14.7-15.7 MC
WHT/ORN
WHT/BLU
WHT/BLK
WHT/GRN
WHT/YEL
11.4-12.2 MC
9.4-10 MC
4-9 MC
2-4 MC
C34A
C34B
C37
C39
25PF
±10%
C40
50PF
±10%
BRN
WHT/BLK
L7
2.1Ω
L8
2.5Ω
L9
2.5Ω
C41
J1
REAR VIEW
LW
FIXED LOOP
L10
BC
P1
PIN END VIEW

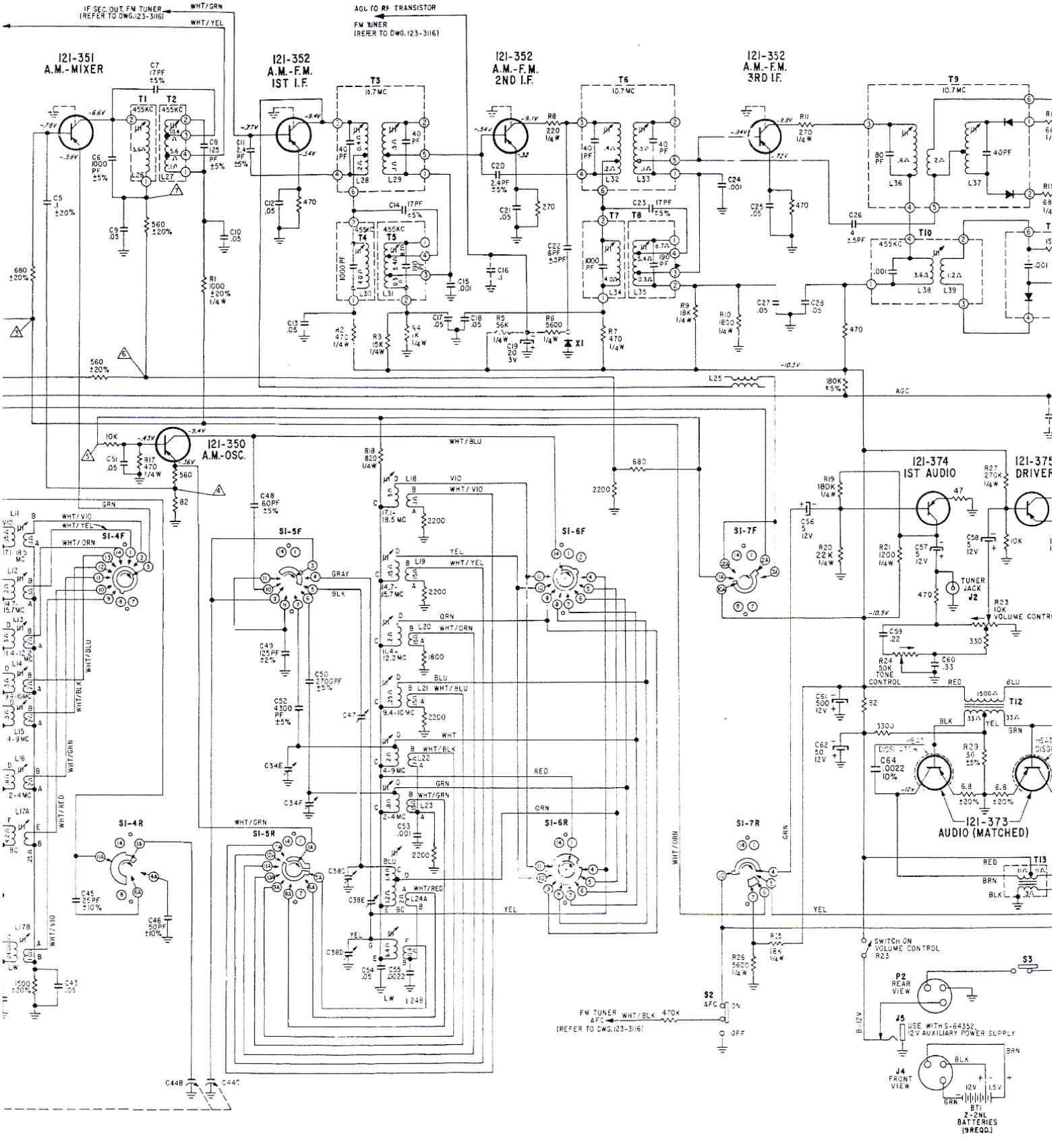

IF SEC. OUT. FM TUNER (REFER TO DWG. 123-3116)
AGC TO RF TRANSISTOR
FM TUNER (REFER TO DWG. 123-3116)
121-351 A.M.-MIXER
121-352 A.M.-F.M. 1ST I.F.
121-352 A.M.-F.M. 2ND I.F.
121-352 A.M.-F.M. 3RD I.F.
121-350 A.M.-OSC.
121-374 1ST AUDIO
121-373 AUDIO (MATCHED)
TUNER JACK J2
R23 10K VOLUME CONTROL
R24 50K TONE CONTROL
SWITCH ON VOLUME CONTROL R23
P2 REAR VIEW
J5 USE WITH S-64352, 12V AUXILIARY POWER SUPPLY
J4 FRONT VIEW
BT1 Z-2NL BATTERIES (9 REQD.)
FM TUNER AFC (REFER TO DWG. 123-3116)
S2 AFC ON OFF

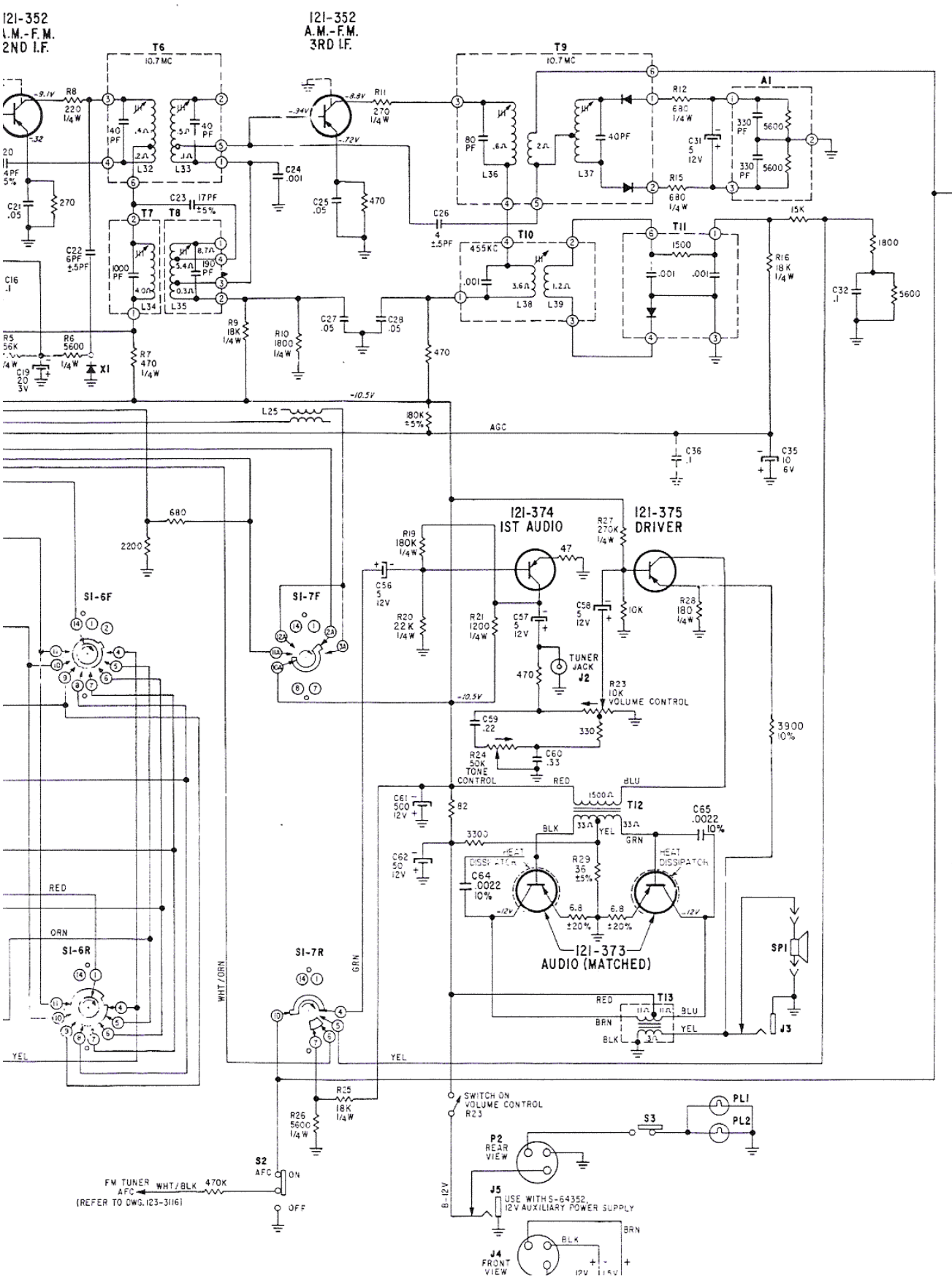

MATCHING GROUP
A
B – D
C – E – G
F – H – J
I – K – M
L – N – P
O – Q

THE OUTPUT TRANSISTOR
IDENTIFICATION WILL BE LE
TRANSISTORS USED IN ANY
MUST BE MATCHED ACCORD
GROUP CHART.
LETTERS CAN BE INTERMI
MUST BE FROM THE SAME

NOTES:

1. ALL RESISTORS ±10% TOLERANCE, 1/2 W
CARBON UNLESS OTHERWISE SPECIFIE
2. RESISTANCE VALUES IN OHMS, CAPACIT
MICROFARADS UNLESS OTHERWISE SPE
3. ALL VOLTAGES ARE D.C. UNLESS OTHERW
4. D.C. VOLTAGES SHOWN ARE MEASURED
SIGNAL USING A VACUUM TUBE VOLTME
5. △1 NUMBERS IN TRIANGLES INDICATE
TEST POINTS. REFER TO NUMBERS
ON 123-3118, TRANSISTOR AND TRIM
6. NO SIGNAL CURRENT DRAIN IS 25 MA.
7. USE ONLY ZENITH NON-INDUCTIVE ELE
CONDENSERS FOR REPLACEMENT. IF AN
OF ELECTROLYTIC IS USED, IT WILL BE
TO ADD C16 AND C36, SHOWN IN DOTTE

DENOTES CHASSIS

123-3125